Sivarama P. Dandamudi

Guide to Assembly Language Programming in Linux

DVD-ROM

Springer

Guide to Assembly Language Programming in Linux

Sivarama P. Dandamudi

Guide to Assembly Language Programming in Linux

Springer

This eBook does not include ancillary media that was packaged with the printed version of the book.

Sivarama P. Dandamudi
School of Computer Science
Carleton University
Ottawa, ON K1S 5B6
Canada
sivarama@scs.carleton.ca

Library of Congress Cataloging-in-Publication Data

A C.I.P. Catalogue record for this book is available
from the Library of Congress.

ISBN-10: 0-387-25897-3 (SC)
ISBN-13: 978-0387-25897-3 (SC)
ISBN-10: 0-387-26171-0 (e-book)
ISBN-13: 978-0387-26171-3 (e-book)
Printed on acid-free paper.

© 2005 Springer Science+Business Media, Inc.
All rights reserved. This work may not be translated or copied in whole or in part without the written permission of the publisher (Springer Science+Business Media, Inc., 233 Spring Street, New York, NY 10013, USA), except for brief excerpts in connection with reviews or scholarly analysis. Use in connection with any form of information storage and retrieval, electronic adaptation, computer software, or by similar or dissimilar methodology now known or hereafter developed is forbidden.
The use in this publication of trade names, trademarks, service marks and similar terms, even if they are not identified as such, is not to be taken as an expression of opinion as to whether or not they are subject to proprietary rights.

Printed in the United States of America.

9 8 7 6 5 4 3 2 1 SPIN 11302087

springeronline.com

To
my parents, **Subba Rao** and **Prameela Rani**,
my wife, **Sobha**,
and
my daughter, **Veda**

Preface

The primary goal of this book is to teach the IA-32 assembly language programming under the Linux operating system. A secondary objective is to provide a gentle introduction to the Fedora Linux operating system. Linux has evolved substantially since its first appearance in 1991. Over the years, its popularity has grown as well. According to an estimate posted on `http://counter.li.org/`, there are about 18 million Linux users worldwide. Hopefully, this book encourages even more people to switch to Linux.

The book is self-contained and provides all the necessary background information. Since assembly language is very closely linked to the underlying processor architecture, a part of the book is dedicated to giving computer organization details. In addition, the basics of Linux are introduced in a separate chapter. These details are sufficient to work with the Linux operation system.

The reader is assumed to have had some experience in a structured, high-level language such as C. However, the book does not assume extensive knowledge of any high-level language—only the basics are needed.

Approach and Level of Presentation

The book is targeted for software professionals who would like to move to Linux and get a comprehensive introduction to the IA-32 assembly language. It provides detailed, step-by-step instructions to install Linux as the second operating system.

No previous knowledge of Linux is required. The reader is introduced to Linux and its commands. Four chapters are dedicated to Linux and NASM assembler (installation and usage). The accompanying DVD-ROMs provide the necessary software to install the Linux operating system and learn assembly language programming.

The assembly language is presented from the professional viewpoint. Since most professionals are full-time employees, the book takes their time constraints into consideration in presenting the material.

Summary of Special Features

Here is a summary of the special features that sets this book apart:

- The book includes the Red Hat Fedora Core 3 Linux distribution (a total of two DVD-ROMs are included with the book). Detailed step-by-step instructions are given to install Linux on a Windows machine. A complete chapter is used for this purpose, with several screenshots to help the reader during the installation process.
- Free NASM assembler is provided so that the readers can get hands-on assembly language programming experience.
- Special I/O software is provided to simplify assembly language programming. A set of input and output routines is provided so that the reader can focus on writing assembly language programs rather than spending time in understanding how the input and output are done using the basic I/O functions provided by the operating system.
- Three chapters are included on computer organization. These chapters provide the necessary background to program in the assembly language.
- Presentation of material is suitable for self-study. To facilitate this, extensive programming examples and figures are used to help the reader grasp the concepts. Each chapter contains a simple programming example in "Our First Program" section to gently introduce the concepts discussed in the chapter. This section is typically followed by "Illustrative Examples" section, which gives more programming examples.
- This book does not use fragments of code in examples. All examples are complete in the sense that they can be assembled and run, giving a better feeling as to how these programs work. These programs are on the accompanying DVD-ROM (DVD 2). In addition, you can also download these programs from the book's Web site at the following URL: `http://www.scs.carleton.ca/~sivarama/linux_book`.
- Each chapter begins with an overview and ends with a summary.

Overview of the Book

The book is divided into seven parts. Part I provides introduction to the assembly language and gives reasons for programming in the assembly language. Assembly language is a low-level language. To program in the assembly language, you should have some basic knowledge about the underlying processor and system organization. Part II provides this background on computer organization. Chapter 2 introduces the digital logic circuits. The next chapter gives details on memory organization. Chapter 4 describes the Intel IA-32 architecture.

Part III covers the topics related to Linux installation and usage. Chapter 5 gives detailed information on how you can install the Fedora Core Linux provided on the accompanying DVD-ROMs. It also explains how you can make your system dual bootable so that you can select the operating system (Windows or Linux) at boot time. Chapter 6 gives a brief introduction to the Linux operating system. It gives enough details so that you feel comfortable using the Linux operating system. If you are familiar with Linux, you can skip this chapter.

Part IV also consists of two chapters. It deals with assembling and debugging assembly language programs. Chapter 7 gives details on the NASM assembler. It also describes the I/O routines developed by the author to facilitate assembly language programming. The next chapter looks at the debugging aspect of program development. We describe the GNU debugger (`gdb`), which is a command-line debugger. This chapter also gives details on Data Display Debugger (DDD),

which is a nice graphical front-end for gdb. Both debuggers are included on the accompanying DVD-ROMs.

After covering the setup and usage details of Linux and NASM, we look at the assembly language in Part V. This part introduces the basic instructions of the assembly language. To facilitate modular program development, we introduce procedures in the third chapter of this part. The remaining chapters describe the addressing modes and other instructions that are commonly used in assembly language programs.

Part VI deals with advanced assembly language topics. It deals with topics such as string processing, recursion, floating-point operations, and interrupt processing. In addition, Chapter 21 explains how you can interface with high-level languages. By using C, we explain how you can call assembly language procedures from C and vice versa. This chapter also discusses how assembly language statements can be embedded into high-level language code. This process is called inline assembly. Again, by using C, this chapter shows how inline assembly is done under Linux.

The last part consists of five appendices. These appendices give information on number systems and character representation. In addition, Appendix D gives a summary of the IA-32 instruction set. A comprehensive glossary is given in Appendix E.

Acknowledgments

I want to thank Wayne Wheeler, Editor and Ann Kostant, Executive Editor at Springer for suggesting the project. I am also grateful to Wayne for seeing the project through.

My wife Sobha and daughter Veda deserve my heartfelt thanks for enduring my preoccupation with this project! I also thank Sobha for proofreading the manuscript. She did an excellent job!

I also express my appreciation to the School of Computer Science at Carleton University for providing a great atmosphere to complete this book.

Feedback

Works of this nature are never error-free, despite the best efforts of the authors and others involved in the project. I welcome your comments, suggestions, and corrections by electronic mail.

Ottawa, Canada
January 2005

Sivarama P. Dandamudi
sivarama@scs.carleton.ca
http://www.scs.carleton.ca/~sivarama

Contents

Preface vii

PART I Overview 1

1 Assembly Language 3
Introduction . . . 3
What Is Assembly Language? . . . 5
Advantages of High-Level Languages . . . 6
Why Program in Assembly Language? . . . 7
Typical Applications . . . 8
Summary . . . 8

PART II Computer Organization 9

2 Digital Logic Circuits 11
Introduction . . . 11
Simple Logic Gates . . . 13
Logic Functions . . . 15
Deriving Logical Expressions . . . 17
Simplifying Logical Expressions . . . 18
Combinational Circuits . . . 23
Adders . . . 26
Programmable Logic Devices . . . 29
Arithmetic and Logic Units . . . 32
Sequential Circuits . . . 35
Latches . . . 37
Flip-Flops . . . 39
Summary . . . 43

3 Memory Organization 45
Introduction . . . 45
Basic Memory Operations . . . 46
Types of Memory . . . 48
Building a Memory Block . . . 50

Building Larger Memories 52
Mapping Memory 56
Storing Multibyte Data 58
Alignment of Data 59
Summary 60

4 The IA-32 Architecture 61
Introduction 61
Processor Execution Cycle 63
Processor Registers 63
Protected Mode Memory Architecture 67
Real Mode Memory Architecture 72
Mixed-Mode Operation 74
Which Segment Register to Use 75
Input/Output 76
Summary 78

PART III Linux 79

5 Installing Linux 81
Introduction 81
Partitioning Your Hard Disk 82
Installing Fedora Core Linux 92
Installing and Removing Software Packages 107
Mounting Windows File System 110
Summary 112
Getting Help 114

6 Using Linux 115
Introduction 115
Setting User Preferences 117
System Settings 123
Working with the GNOME Desktop 126
Command Terminal 132
Getting Help 134
Some General-Purpose Commands 135
File System 139
Access Permissions 141
Redirection 145
Pipes 146
Editing Files with Vim 147
Summary 149

PART IV NASM 151

7 Installing and Using NASM 153
Introduction 153
Installing NASM 154

Generating the Executable File 154
Assembly Language Template 155
Input/Output Routines 156
An Example Program 159
Assembling and Linking 160
Summary 166
Web Resources 166

8 Debugging Assembly Language Programs 167
Strategies to Debug Assembly Language Programs 167
Preparing Your Program 169
GNU Debugger 170
Data Display Debugger 179
Summary 184

PART V Assembly Language 185

9 A First Look at Assembly Language 187
Introduction 187
Data Allocation 188
Where Are the Operands 193
Overview of Assembly Language Instructions 196
Our First Program 205
Illustrative Examples 206
Summary 209

10 More on Assembly Language 211
Introduction 211
Data Exchange and Translate Instructions 212
Shift and Rotate Instructions 213
Defining Constants 217
Macros 218
Our First Program 221
Illustrative Examples 223
When to Use the XLAT Instruction 227
Summary 229

11 Writing Procedures 231
Introduction 231
What Is a Stack? 233
Implementation of the Stack 234
Stack Operations 236
Uses of the Stack 238
Procedure Instructions 239
Our First Program 241
Parameter Passing 242
Illustrative Examples 248
Summary 252

12 More on Procedures **255**
Introduction 255
Local Variables 256
Our First Program 257
Multiple Source Program Modules 260
Illustrative Examples 261
Procedures with Variable Number of Parameters 268
Summary 272

13 Addressing Modes **273**
Introduction 273
Memory Addressing Modes 274
Arrays 278
Our First Program 281
Illustrative Examples 282
Summary 289

14 Arithmetic Instructions **291**
Introduction 291
Status Flags 292
Arithmetic Instructions 302
Our First Program 309
Illustrative Examples 310
Summary 316

15 Conditional Execution **317**
Introduction 317
Unconditional Jump 318
Compare Instruction 321
Conditional Jumps 322
Looping Instructions 327
Our First Program 328
Illustrative Examples 330
Indirect Jumps 335
Summary 339

16 Logical and Bit Operations **341**
Introduction 341
Logical Instructions 342
Shift Instructions 347
Rotate Instructions 353
Bit Instructions 354
Our First Program 355
Illustrative Examples 357
Summary 360

PART VI Advanced Assembly Language **361**

17 String Processing **363**
String Representation 363
String Instructions 364
Our First Program 372
Illustrative Examples 373
Testing String Procedures 376
Summary 378

18 ASCII and BCD Arithmetic **379**
Introduction 379
Processing in ASCII Representation 381
Our First Program 384
Processing Packed BCD Numbers 385
Illustrative Example 387
Decimal Versus Binary Arithmetic 389
Summary 390

19 Recursion **391**
Introduction 391
Our First Program 392
Illustrative Examples 394
Recursion Versus Iteration 400
Summary 401

20 Protected-Mode Interrupt Processing **403**
Introduction 403
A Taxonomy of Interrupts 404
Interrupt Processing in the Protected Mode 405
Exceptions 408
Software Interrupts 410
File I/O 411
Our First Program 415
Illustrative Examples 415
Hardware Interrupts 418
Direct Control of I/O Devices 419
Summary 420

21 High-Level Language Interface **423**
Introduction 423
Calling Assembly Procedures from C 424
Our First Program 427
Illustrative Examples 428
Calling C Functions from Assembly 432
Inline Assembly 434
Summary 441

22 Floating-Point Operations **443**
Introduction 443
Floating-Point Unit Organization 444
Floating-Point Instructions 447
Our First Program 453
Illustrative Examples 455
Summary 458

APPENDICES **459**

A Number Systems **461**
Positional Number Systems 461
Conversion to Decimal 463
Conversion from Decimal 463
Binary/Octal/Hexadecimal Conversion 464
Unsigned Integers 466
Signed Integers 466
Floating-Point Representation 469
Summary 471

B Character Representation **473**
Character Representation 473
ASCII Character Set 474

C Programming Exercises **477**

D IA-32 Instruction Set **485**
Instruction Format 485
Selected Instructions 487

E Glossary **517**

Index **527**

PART I

Overview

1

Assembly Language

The main objective of this chapter is to give you a brief introduction to the assembly language. To achieve this goal, we compare and contrast the assembly language with high-level languages you are familiar with. This comparison enables us to take a look at the pros and cons of the assembly language vis-à-vis high-level languages.

Introduction

A user's view of a computer system depends on the degree of abstraction provided by the underlying software. Figure 1.1 shows a hierarchy of levels at which one can interact with a computer system. Moving to the top of the hierarchy shields the user from the lower-level details. At the highest level, the user interaction is limited to the interface provided by application software such as spreadsheet, word processor, and so on. The user is expected to have only a rudimentary knowledge of how the system operates. Problem solving at this level, for example, involves composing a letter using the word processor software.

At the next level, problem solving is done in one of the *high-level languages* such as C and Java. A user interacting with the system at this level should have detailed knowledge of software development. Typically, these users are application programmers. Level 4 users are knowledgeable about the application and the high-level language that they would use to write the application software. They may not, however, know internal details of the system unless they also happen to be involved in developing system software such as device drivers, assemblers, linkers, and so on.

Both levels 4 and 5 are *system independent*, that is, independent of a particular processor used in the system. For example, an application program written in C can be executed on a system with an Intel processor or a PowerPC processor without modifying the source code. All we have to do is recompile the program with a C compiler native to the target system. In contrast, software development done at all levels below level 4 is *system dependent*.

Assembly language programming is referred to as *low-level programming* because each assembly language instruction performs a much lower-level task compared to an instruction in a high-level language. As a consequence, to perform the same task, assembly language code tends to be much larger than the equivalent high-level language code.

Assembly language instructions are native to the processor used in the system. For example, a program written in the Intel assembly language cannot be executed on the PowerPC processor.

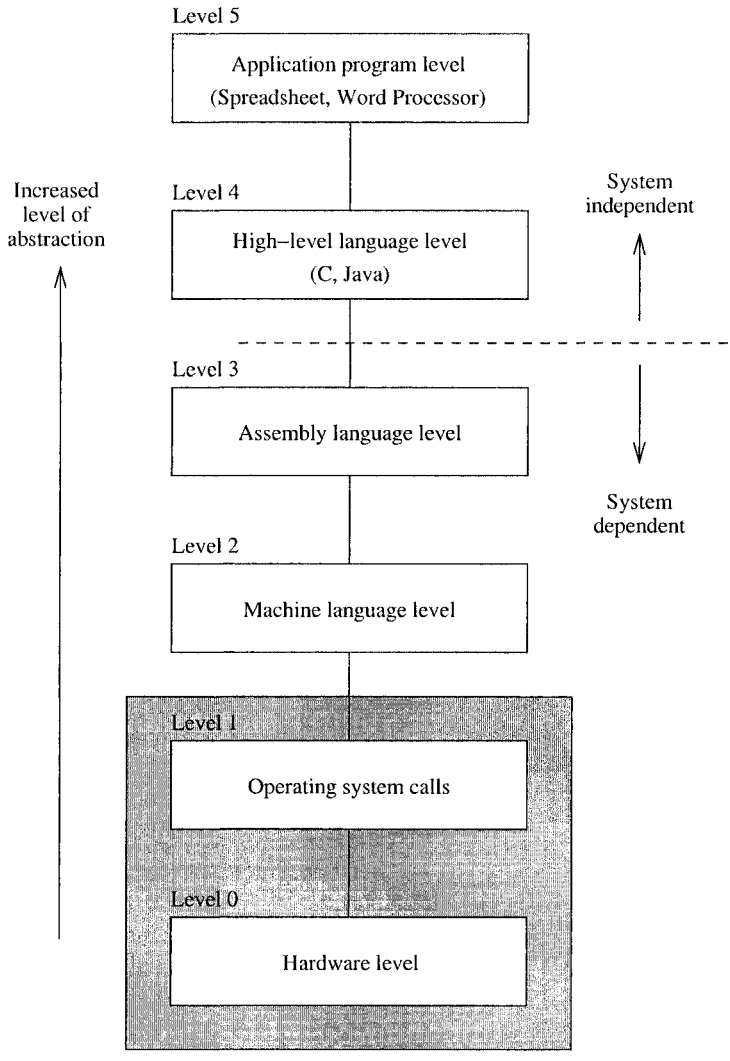

Figure 1.1 A user's view of a computer system.

Programming in the assembly language also requires knowledge about system internal details such as the processor architecture, memory organization, and so on.

Machine language is a close relative of the assembly language. Typically, there is a one-to-one correspondence between the assembly language and machine language instructions. The processor understands only the machine language, whose instructions consist of strings of 1s and 0s. We say more on these two languages in the next section.

Even though assembly language is considered a low-level language, programming in assembly language will not expose you to all the nuts and bolts of the system. Our operating system hides several of the low-level details so that the assembly language programmer can breathe easy. For example, if we want to read input from the keyboard, we can rely on the services provided by the operating system.

Well, ultimately there has to be something to execute the machine language instructions. This is the system hardware, which consists of digital logic circuits and the associated support electronics. A detailed discussion of this topic is beyond the scope of this book. Books on computer organization discuss this topic in detail.

What Is Assembly Language?

Assembly language is directly influenced by the instruction set and architecture of the processor. In this book, we focus on the assembly language for the Intel 32-bit processors like the Pentium. The assembly language code must be processed by a program in order to generate the machine language code. *Assembler* is the program that translates the assembly language code into the machine language.

NASM (Netwide Assembler), MASM (Microsoft Assembler), and TASM (Borland Turbo Assembler) are some of the popular assemblers for the Intel processors. In this book, we use the NASM assembler. There are two main reasons for this selection: (i) It is a free assembler; and (ii) NASM supports a variety of formats including the formats used by Microsoft Windows, Linux and a host of others.

Are you curious as to how the assembly language instructions look like? Here are some examples:

```
inc   result
mov   class_size,45
and   mask1,128
add   marks,10
```

The first instruction increments the variable `result`. This assembly language instruction is equivalent to

```
result++;
```

in C. The second instruction initializes `class_size` to 45. The equivalent statement in C is

```
class_size = 45;
```

The third instruction performs the bitwise `and` operation on `mask1` and can be expressed in C as

```
mask1 = mask1 & 128;
```

The last instruction updates `marks` by adding 10. In C, this is equivalent to

```
marks = marks + 10;
```

These examples illustrate several points:

1. Assembly language instructions are cryptic.
2. Assembly language operations are expressed by using mnemonics (like `and` and `inc`).
3. Assembly language instructions are low level. For example, we cannot write the following in the assembly language:

   ```
   add     marks,value
   ```

   This instruction is invalid because two variables, `marks` and `value`, are not allowed in a single instruction.

We appreciate the readability of the assembly language instructions by looking at the equivalent machine language instructions. Here are some machine language examples:

Assembly language		Operation	Machine language (in hex)
`nop`		No operation	`90`
`inc`	`result`	Increment	`FF060A00`
`mov`	`class_size,45`	Copy	`C7060C002D00`
`and`	`mask,128`	Logical and	`80260E0080`
`add`	`marks,10`	Integer addition	`83060F000A`

In the above table, machine language instructions are written in the hexadecimal number system. If you are not familiar with this number system, see Appendix A for a quick review of number systems.

It is obvious from these examples that understanding the code of a program in the machine language is almost impossible. Since there is a one-to-one correspondence between the instructions of the assembly language and the machine language, it is fairly straightforward to translate instructions from the assembly language to the machine language. As a result, only a masochist would consider programming in a machine language. However, life was not so easy for some of the early programmers. When microprocessors were first introduced, some programming was in fact done in machine language!

Advantages of High-Level Languages

High-level languages are preferred to program applications, as they provide a convenient abstraction of the underlying system suitable for problem solving. Here are some advantages of programming in a high-level language:

1. *Program development is faster.*
   Many high-level languages provide structures (sequential, selection, iterative) that facilitate program development. Programs written in a high-level language are relatively small compared to the equivalent programs written in an assembly language. These programs are also easier to code and debug.

2. *Programs are easier to maintain.*
   Programming a new application can take from several weeks to several months and the lifecycle of such an application software can be several years. Therefore, it is critical that software development be done with a view of software maintainability, which involves activities ranging from fixing bugs to generating the next version of the software. Programs

written in a high-level language are easier to understand and, when good programming practices are followed, easier to maintain. Assembly language programs tend to be lengthy and take more time to code and debug. As a result, they are also difficult to maintain.

3. *Programs are portable.*
   High-level language programs contain very few processor-specific details. As a result, they can be used with little or no modification on different computer systems. In contrast, assembly language programs are processor-specific.

Why Program in Assembly Language?

The previous section gives enough reasons to discourage you from programming in the assembly language. However, there are two main reasons why programming is still done in assembly language: (i) efficiency, and (ii) accessibility to system hardware.

Efficiency refers to how "good" a program is in achieving a given objective. Here we consider two objectives based on space (space-efficiency) and time (time-efficiency).

Space-efficiency refers to the memory requirements of a program, that is, the size of the executable code. Program A is said to be more space-efficient if it takes less memory space than program B to perform the same task. Very often, programs written in the assembly language tend to be more compact than those written in a high-level language.

Time-efficiency refers to the time taken to execute a program. Obviously a program that runs faster is said to be better from the time-efficiency point of view. If we craft assembly language programs carefully, they tend to run faster than their high-level language counterparts.

As an aside, we can also define a third objective: how fast a program can be developed (i.e., write code and debug). This objective is related to the *programmer productivity*, and assembly language loses the battle to high-level languages as discussed in the last section.

The superiority of assembly language in generating compact code is becoming increasingly less important for several reasons. First, the savings in space pertain only to the program code and not to its data space. Thus, depending on the application, the savings in space obtained by converting an application program from some high-level language to the assembly language may not be substantial. Second, the cost of memory has been decreasing and memory capacity has been increasing. Thus, the size of a program is not a major hurdle anymore. Finally, compilers are becoming "smarter" in generating code that is both space- and time-efficient. However, there are systems such as embedded controllers and handheld devices in which space-efficiency is important.

One of the main reasons for writing programs in an assembly language is to generate code that is time-efficient. The superiority of assembly language programs in producing efficient code is a direct manifestation of *specificity*. That is, assembly language programs contain only the code that is necessary to perform the given task. Even here, a "smart" compiler can optimize the code that can compete well with its equivalent written in the assembly language. Although the gap is narrowing with improvements in compiler technology, assembly language still retains its advantage for now.

The other main reason for writing assembly language programs is to have direct control over system hardware. High-level languages, on purpose, provide a restricted (abstract) view of the underlying hardware. Because of this, it is almost impossible to perform certain tasks that require access to the system hardware. For example, writing a device driver for a new scanner on the market almost certainly requires programming in assembly language. Since assembly language

does not impose any restrictions, you can have direct control over the system hardware. If you are developing system software, you cannot avoid writing assembly language programs.

Typical Applications

We have identified three main advantages to programming in an assembly language.

1. Time-efficiency
2. Accessibility to hardware
3. Space-efficiency

Time-efficiency: Applications for which the execution speed is important fall under two categories:

1. Time convenience (to improve performance)
2. Time critical (to satisfy functionality)

Applications in the first category benefit from time-efficient programs because it is convenient or desirable. However, time-efficiency is not absolutely necessary for their operation. For example, a graphics package that scales an object instantaneously is more pleasant to use than the one that takes noticeable time.

In *time-critical applications*, tasks have to be completed within a specified time period. These applications, also called *real-time applications*, include aircraft navigation systems, process control systems, robot control software, communications software, and target acquisition (e.g., missile tracking) software.

Accessibility to hardware: System software often requires direct control over the system hardware. Examples include operating systems, assemblers, compilers, linkers, loaders, device drivers, and network interfaces. Some applications also require hardware control. Video games are an obvious example.

Space-efficiency: As mentioned before, for most systems, compactness of application code is not a major concern. However, in portable and handheld devices, code compactness is an important factor. Space-efficiency is also important in spacecraft control systems.

Summary

We introduced assembly language and discussed where it fits in the hierarchy of computer languages. Our discussion focused on the usefulness of high-level languages vis-à-vis the assembly language. We noted that high-level languages are preferred, as their use aids in faster program development, program maintenance, and portability. Assembly language, however, provides two chief benefits: faster program execution, and access to system hardware. We give more details on the assembly language in Parts V and VI.

PART II

Computer Organization

2

Digital Logic Circuits

Viewing computer systems at the digital logic level exposes us to the nuts and bolts of the basic hardware. The goal of this chapter is to cover the necessary digital logic background. Our discussion can be divided into three parts. In the first part, we focus on the basics of digital logic circuits. We start off with a look at the basic gates such as AND, OR, and NOT gates. We introduce Boolean algebra to manipulate logical expressions. We also explain how logical expressions are simplified in order to get an efficient digital circuit implementation.

The second part introduces combinational circuits, which provide a higher level of abstraction than the basic circuits discussed in the first part. We review several commonly used combinational circuits including multiplexers, decoders, comparators, adders, and ALUs.

In the last part, we review sequential circuits. In sequential circuits, the output depends both on the current inputs as well as the past history. This feature brings the notion of time into digital logic circuits. We introduce system clock to provide this timing information. We discuss two types of circuits: latches and flip-flops. These devices can be used to store a single bit of data. Thus, they provide the basic capability to design memories. These devices can be used to build larger memories, a topic covered in detail in the next chapter.

Introduction

A computer system has three main components: a central processing unit (CPU) or processor, a memory unit, and input/output (I/O) devices. These three components are interconnected by a *system bus*. The term bus is used to represent a group of electrical signals or the wires that carry these signals. Figure 2.1 shows details of how they are interconnected and what actually constitutes the system bus. As shown in this figure, the three major components of the system bus are the address bus, data bus, and control bus.

The width of address bus determines the memory addressing capacity of the processor. The width of data bus indicates the size of the data transferred between the processor and memory or I/O device. For example, the 8086 processor had a 20-bit address bus and a 16-bit data bus. The amount of physical memory that this processor can address is 2^{20} bytes, or 1 MB, and each data transfer involves 16 bits. The Pentium processor, for example, has 32 address lines and 64 data lines. Thus, it can address up to 2^{32} bytes, or a 4 GB memory. Furthermore, each data transfer can

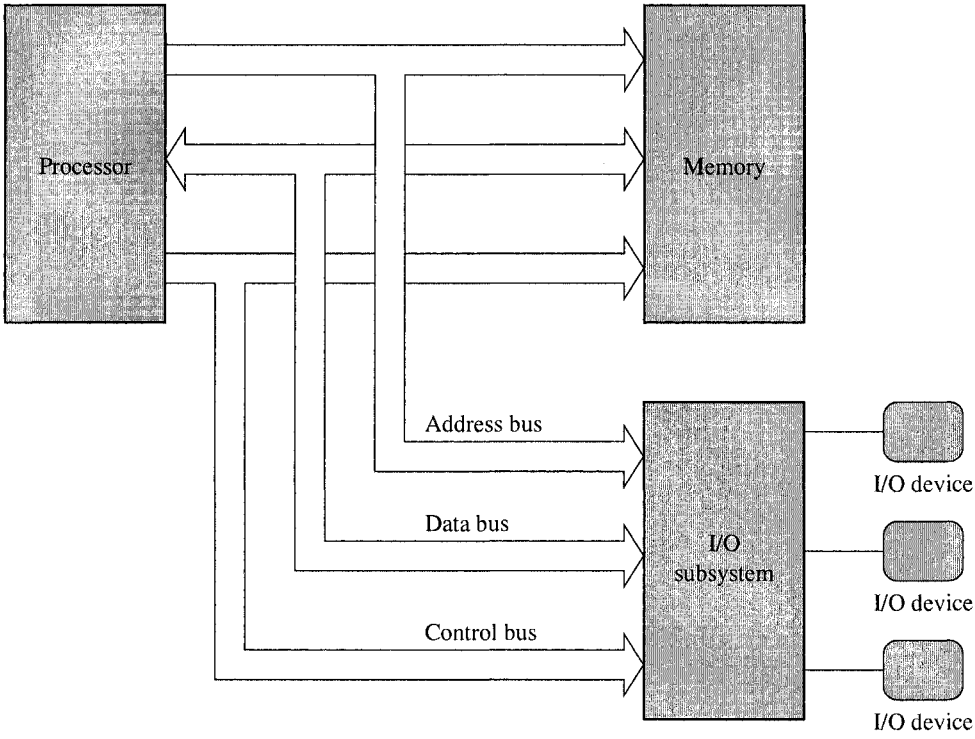

Figure 2.1 Simplified block diagram of a computer system.

move 64 bits. In comparison, the Intel 64-bit processor Itanium uses 64 address lines and 128 data lines.

The control bus consists of a set of control signals. Typical control signals include memory read, memory write, I/O read, I/O write, interrupt, interrupt acknowledge, bus request, and bus grant. These control signals indicate the type of action taking place on the system bus. For example, when the processor is writing data into the memory, the memory write signal is asserted. Similarly, when the processor is reading from an I/O device, the I/O read signal is asserted.

The system memory, also called *main memory* or *primary memory*, is used to store both program instructions and data. I/O devices such as the keyboard and display are used to provide user interface. I/O devices are also used to interface with secondary storage devices such as disks.

The system bus is the communication medium for data transfers. Such data transfers are called *bus transactions*. Some examples of bus transactions are memory read, memory write, I/O read, I/O write, and interrupt. Depending on the processor and the type of bus used, there may be other types of transactions. For example, the Pentium processor supports a burst mode of data transfer in which up to four 64 bits of data can be transferred in a burst cycle.

Every bus transaction involves a *master* and a *slave*. The master is the initiator of the transaction and the slave is the target of the transaction. For example, when the processor wants to read data from the memory, it initiates a bus transaction, also called a bus cycle, in which the processor

is the bus master and memory is the slave. The processor usually acts as the master of the system bus, while components like memory are usually slaves. Some components may act as slaves for some transactions and as masters for other transactions.

When there is more than one master device, which is typically the case, the device requesting the use of the bus sends a *bus request* signal to the bus arbiter using the bus request control line. If the bus arbiter grants the request, it notifies the requesting device by sending a signal on the *bus grant* control line. The granted device, which acts as the master, can then use the bus for data transfer. The bus-request-grant procedure is called *bus protocol*. Different buses use different bus protocols. In some protocols, permission to use the bus is granted for only one bus cycle; in others, permission is granted until the bus master relinquishes the bus.

The hardware that is responsible for executing machine language instructions can be built using a few basic building blocks. These building blocks are called *logic gates*. These logic gates implement the familiar logical operations such as AND, OR, NOT, and so on, in hardware. The purpose of this chapter is to provide the basics of the digital hardware. The next two chapters introduce memory organization and architecture of the Intel IA-32 processors.

Our discussion of digital logic circuits is divided into three parts. The first part deals with the basics of digital logic gates. Then we look at two higher levels of abstractions—combinational and sequential circuits. In combinational circuits, the output of the circuit depends solely on the *current* inputs applied to the circuit. The adder is an example of a combinational circuit. The output of an adder depends only on the current inputs. On the other hand, the output of a sequential circuit depends not only on the current inputs but also on the past inputs. That is, output depends both on the current inputs as well as on how it got to the current state. For example, in a binary counter, the output depends on the current value. The next value is obtained by incrementing the current value (in a way, the current state represents a snapshot of the past inputs). That is, we cannot say what the output of a counter will be unless we know its current state. Thus, the counter is a sequential circuit. We review both combinational and sequential circuits in this chapter.

Simple Logic Gates

You are familiar with the three basic logical operators: AND, OR, and NOT. Digital circuits to implement these and other logical functions are called gates. Figure 2.2a shows the symbol notation used to represent the AND, OR, and NOT gates. The NOT gate is often referred to as the inverter. We have also included the truth table for each gate. A *truth table* is a list of all possible input combinations and their corresponding output. For example, if you treat a logical zero as representing false and a logical 1 truth, you can see that the truth table for the AND gate represents the logical AND operation.

Even though the three gates shown in Figure 2.2a are sufficient to implement any logical function, it is convenient to implement certain other gates. Figure 2.2b shows three popularly used gates. The NAND gate is equivalent to an AND gate followed by a NOT gate. Similarly, the NOR gates are a combination of the OR and NOT gates. The exclusive-OR (XOR) gate generates a 1 output whenever the two inputs differ. This property makes it useful in certain applications such as parity generation.

Logic gates are in turn built using transistors. One transistor is enough to implement a NOT gate. But we need three transistors to implement the AND and OR gates. It is interesting to note that, contrary to our intuition, implementing the NAND and NOR gates requires only two transistors. In this sense, transistors are the basic electronic components of digital hardware circuits. For example, the Pentium processor introduced in 1993 consists of about 3 million transistors. It is now possible to design chips with more than 100 million transistors.

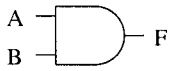

AND gate

A	B	F
0	0	0
0	1	0
1	0	0
1	1	1

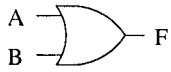

OR gate

A	B	F
0	0	0
0	1	1
1	0	1
1	1	1

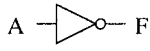

NOT gate

A	F
0	1
1	0

Logic symbol

Truth table

(a) Basic logic gates

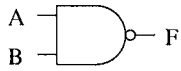

NAND gate

A	B	F
0	0	1
0	1	1
1	0	1
1	1	0

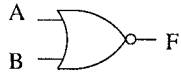

NOR gate

A	B	F
0	0	1
0	1	0
1	0	0
1	1	0

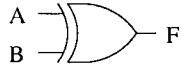

XOR gate

A	B	F
0	0	0
0	1	1
1	0	1
1	1	0

Logic symbol

Truth table

(b) Some additional logic gates

Figure 2.2 Simple logic gates: Logic symbols and truth tables.

There is a *propagation delay* associated with each gate. This delay represents the time required for the output to react to an input. The propagation delay depends on the complexity of the circuit and the technology used. Typical values for the TTL gates are in the range of a few nanoseconds (about 5 to 10 ns). A nanosecond (ns) is 10^{-9} second.

In addition to propagation delay, other parameters should be taken into consideration in designing and building logic circuits. Two such parameters are fanin and fanout. *Fanin* specifies the maximum number of inputs a logic gate can have. *Fanout* refers to the driving capacity of an output. Fanout specifies the maximum number of gates that the output of a gate can drive.

A small set of independent logic gates (such as AND, NOT, NAND, etc.) are packaged into an integrated circuit (IC) chip, or "chip" for short. These ICs are called small-scale integrated (SSI) circuits and typically consist of about 1 to 10 gates. Medium-scale integrated (MSI) circuits represent the next level of integration (typically between 10 and 100 gates). Both SSI and MSI were introduced in the late 1960s. LSI (large-scale integration), introduced in early 1970s, can integrate between 100 and 10,000 gates on a single chip. The final degree of integration, VLSI (very large scale integration), was introduced in the late 1970s and is used for complex chips such as microprocessors that require more than 10,000 gates.

Table 2.1 Truth tables for the majority and even-parity functions

Majority function

A	B	C	F_1
0	0	0	0
0	0	1	0
0	1	0	0
0	1	1	1
1	0	0	0
1	0	1	1
1	1	0	1
1	1	1	1

Even-parity function

A	B	C	F_2
0	0	0	0
0	0	1	1
0	1	0	1
0	1	1	0
1	0	0	1
1	0	1	0
1	1	0	0
1	1	1	1

Logic Functions

Logic functions can be specified in a variety of ways. In a sense their expression is similar to problem specification in software development. A logical function can be specified verbally. For example, a majority function can be specified as: Output should be 1 whenever the majority of the inputs is 1. Similarly, an even-parity function can be specified as: Output (parity bit) is 1 whenever there is an odd number of 1s in the input. The major problem with verbal specification is the imprecision and the scope for ambiguity.

We can make this specification precise by using a truth table. In the truth table method, for each possible input combination, we specify the output value. The truth table method makes sense for logical functions as the alphabet consists of only 0 and 1. The truth tables for the 3-input majority and even-parity functions are shown in Table 2.1.

The advantage of the truth table method is that it is precise. This is important if you are interfacing with a client who does not understand other more concise forms of logic function expression. The main problem with the truth table method is that it is cumbersome as the number of rows grows exponentially with the number of logical variables. Imagine writing a truth table for a 10-variable function—it requires $2^{10} = 1024$ rows!

We can also use logical expressions to specify a logical function. Logical expressions use the dot, +, and overbar to represent the AND, OR, and NOT operations, respectively. For example, the output of the AND gate in Figure 2.2 is written as $F = A \cdot B$. Assuming that single letters are used for logical variables, we often omit the dot and write the previous AND function as $F = AB$. Similarly, the OR function is written as $F = A + B$. The output of the NOT gate is expressed as $F = \overline{A}$. Some authors use a prime to represent the NOT operation as in $F = A'$ mainly because of problems with typesetting the overbar.

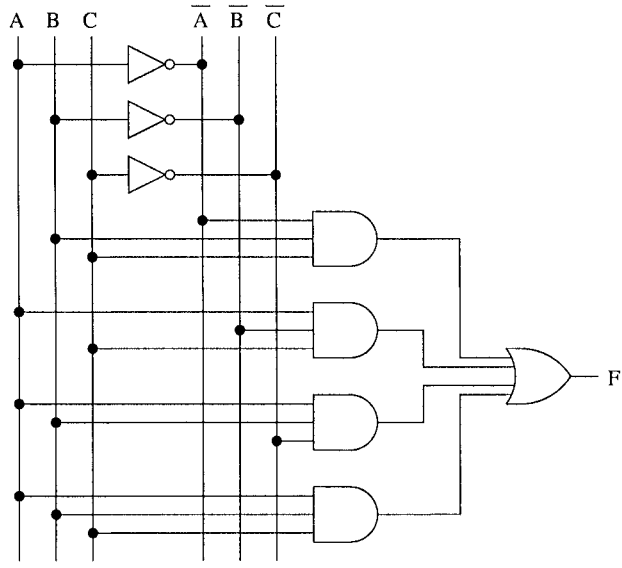

Figure 2.3 Logical circuit to implement the 3-input majority function.

The logical expressions for our 3-input majority and even-parity functions are shown below:

- 3-input majority function = $A\,B + B\,C + A\,C$,
- 3-input even-parity function = $\overline{A}\,\overline{B}\,C + \overline{A}\,B\,\overline{C} + A\,\overline{B}\,\overline{C} + A\,B\,C$.

An advantage of this form of specification is that it is compact while it retains the precision of the truth table method. Another major advantage is that logical expressions can be manipulated to come up with an efficient design. We say more on this topic later.

The final form of specification uses a graphical notation. Figure 2.3 shows the logical circuit to implement the 3-input majority function. As with the last two methods, it is also precise but is more useful for hardware engineers to implement logical functions.

A logic circuit designer may use all the three forms during the design of a logic circuit. A simple circuit design involves the following steps:

- First we have to obtain the truth table from the input specifications.
- Then we derive a logical expression from the truth table.
- We do not want to implement the logical expression derived in the last step as it often contains some redundancy, leading to an inefficient design. For this reason, we simplify the logical expression.
- In the final step, we implement the simplified logical expression. To express the implementation, we use the graphical notation.

The following sections give more details on these steps.

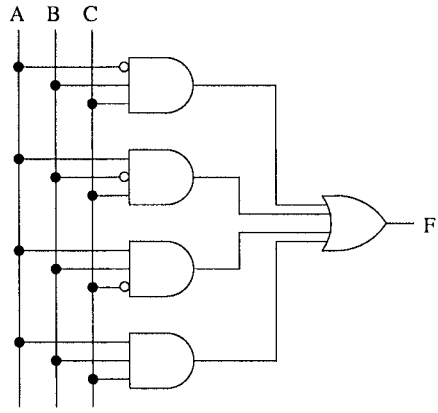

Figure 2.4 Logic circuit for the 3-input majority function using the bubble notation.

Bubble Notation

In large circuits, drawing inverters can be avoided by following what is known as the "bubble" notation. The use of the bubble notation simplifies the circuit diagrams. To appreciate the reduced complexity, compare the bubble notation circuit for the 3-input majority function in Figure 2.4 with that in Figure 2.3.

Deriving Logical Expressions

We can write a logical expression from a truth table in one of two forms: *sum-of-products* (SOP) and *product-of-sums* (POS) forms. In sum-of-products form, we specify the combination of inputs for which the output should be 1. In product-of-sums form, we specify the combinations of inputs for which the output should be 0.

Sum-of-Products Form

In this form, each input combination for which the output is 1 is expressed as an **and** term. This is the *product term* as we use · to represent the AND operation. These product terms are ORed together. That is why it is called sum-of-products as we use + for the OR operation to get the final logical expression. In deriving the product terms, we write the variable if its value is 1 or its complement if 0.

Let us look at the 3-input majority function. The truth table is given in Table 2.1. There are four 1 outputs in this function. So, our logical expression will have four product terms. The first product term we write is for row 4 with a 1 output. Since A has a value of 0, we use its complement in the product term while using B and C as they have 1 as their value in this row. Thus, the product term for this row is $\overline{A}\,B\,C$. The product term for row 6 is $A\,\overline{B}\,C$. Product terms for rows 7 and 8 are $A\,B\,\overline{C}$ and $A\,B\,C$, respectively. ORing these four product terms gives the logical expression as $\overline{A}\,B\,C + A\,\overline{B}\,C + A\,B\,\overline{C} + A\,B\,C$.

Product-of-Sums Form

This is the dual form of the sum-of-products form. We essentially complement what we have done to obtain the sum-of-products expression. Here we look for rows that have a 0 output. Each such row input variable combination is expressed as an OR term. In this OR term, we use the variable if its value in the row being considered is 0 or its complement if 1. We AND these sum terms to get the final product-of-sums logical expression. The product-of-sums expression for the 3-input majority function is $(A+B+C)\,(A+B+\overline{C})\,(A+\overline{B}+C)\,(\overline{A}+B+C)$.

This logical expression and the sum-of-products expressions derived before represent the same truth table. Thus, despite their appearance, these two logical expressions are logically equivalent. We can prove this logical equivalence by using the algebraic manipulation method described in the next section.

Simplifying Logical Expressions

The sum-of-products and product-of-sums logical expressions can be used to come up with a crude implementation that uses only the AND, OR, and NOT gates. The implementation process is straightforward. We illustrate the process for sum-of-products expressions. Figure 2.3 shows the brute force implementation of the sum-of-products expression we derived for the 3-input majority function. If we simplify the logical expression, we can get a more efficient implementation (see Figure 2.5).

Let us now focus on how we can simplify the logical expressions obtained from truth tables. Our focus is on sum-of-products expressions. There are three basic techniques: the algebraic manipulation, Karnaugh map, and Quine–McCluskey methods. Algebraic manipulation uses Boolean laws to derive a simplified logical expression. The Karnaugh map method uses a graphical form and is suitable for simplifying logical expressions with a small number of variables. The last method is a tabular method and is particularly suitable for simplifying logical expressions with a large number of variables. In addition, the Quine–McCluskey method can be used to automate the simplification process. In this section, we discuss the first two methods (for details on the last method, see *Fundamentals of Computer Organization and Design* by Dandamudi).

Algebraic Manipulation

In this method, we use the Boolean algebra to manipulate logical expressions. We need Boolean identities to facilitate this manipulation. These are discussed next. Following this discussion, we show how the identities developed can be used to simplify logical expressions.

Table 2.2 presents some basic Boolean laws. For most laws, there are two versions: an **and** version and an **or** version. If there is only one version, we list it under the **and** version. We can transform a law from the **and** version to the **or** version by replacing each 1 with a 0, 0 with a 1, + with a ·, and · with a +. This relationship is called *duality*.

We can use the Boolean laws to simplify the logical expressions. We illustrate this method by looking at the sum-of-products expression for the majority function. A straightforward simplification leads us to the following expression:

$$\begin{aligned}\text{Majority function} &= \overline{A}BC + A\overline{B}C + \underbrace{AB\overline{C} + ABC}_{AB}\\ &= \overline{A}BC + A\overline{B}C + AB.\end{aligned}$$

Table 2.2 Boolean laws

Name	**and** version	**or** version
Identity	$x \cdot 1 = x$	$x + 0 = x$
Complement	$x \cdot \overline{x} = 0$	$x + \overline{x} = 1$
Commutative	$x \cdot y = y \cdot x$	$x + y = y + x$
Distribution	$x \cdot (y + z) = (x \cdot y) + (x \cdot z)$	$x + (y \cdot z) = (x + y) \cdot (x + z)$
Idempotent	$x \cdot x = x$	$x + x = x$
Null	$x \cdot 0 = 0$	$x + 1 = 1$
Involution	$\overline{\overline{x}} = x$	—
Absorption	$x \cdot (x + y) = x$	$x + (x \cdot y) = x$
Associative	$x \cdot (y \cdot z) = (x \cdot y) \cdot z$	$x + (y + z) = (x + y) + z$
de Morgan	$\overline{x \cdot y} = \overline{x} + \overline{y}$	$\overline{x + y} = \overline{x} \cdot \overline{y}$

Do you know if this is the final simplified form? This is the hard part in applying algebraic manipulation (in addition to the inherent problem of which rule should be applied). This method definitely requires good intuition, which often implies that one needs experience to know if the final form has been derived. In our example, the expression can be further simplified. We start by rewriting the original logical expression by repeating the term A B C twice and then simplifying the expression as shown below.

$$\begin{aligned}
\text{Majority function} &= \overline{\mathrm{A}}\mathrm{BC} + \mathrm{A}\overline{\mathrm{B}}\mathrm{C} + \mathrm{AB}\overline{\mathrm{C}} + \mathrm{ABC} + \underbrace{\mathrm{ABC} + \mathrm{ABC}}_{\text{Added extra}} \\
&= \underbrace{\overline{\mathrm{A}}\mathrm{BC} + \mathrm{ABC}}_{\mathrm{BC}} + \underbrace{\mathrm{A}\overline{\mathrm{B}}\mathrm{C} + \mathrm{ABC}}_{\mathrm{AC}} + \underbrace{\mathrm{AB}\overline{\mathrm{C}} + \mathrm{ABC}}_{\mathrm{AB}} \\
&= \mathrm{BC} + \mathrm{AC} + \mathrm{AB}.
\end{aligned}$$

This is the final simplified expression. In the next section, we show a simpler method to derive this expression. Figure 2.5 shows an implementation of this logical expression.

We can see the benefits of implementing the simplified logical expressions by comparing this implementation with the one shown in Figure 2.3. The simplified version reduces not only the gate count but also the gate complexity.

Karnaugh Map Method

This is a graphical method and is suitable for simplifying logical expressions with a small number of Boolean variables (typically six or less). It provides a straightforward method to derive minimal sum-of-products expressions. This method is preferred to the algebraic method as it takes the guesswork out of the simplification process. For example, in the previous majority function example, it was not straightforward to guess that we have to duplicate the term A B C twice in order to get the final logical expression.

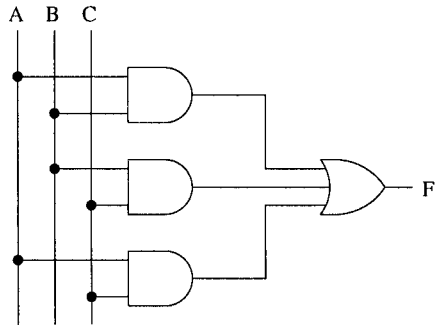

Figure 2.5 An implementation of the simplified 3-input majority function.

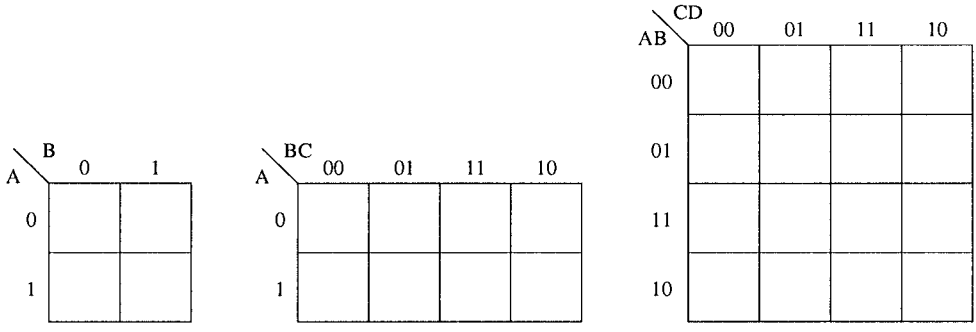

(a) Two-variable K-map (b) Three-variable K-map (c) Four-variable K-map

Figure 2.6 Maps used for simplifying 2-, 3-, and 4-variable logical expressions using the Karnaugh map method.

The Karnaugh map method uses maps to represent the logical function output. Figure 2.6 shows the maps used for 2-, 3-, and 4-variable logical expressions. Each cell in these maps represents a particular input combination. Each cell is filled with the output value of the function corresponding to the input combination represented by the cell. For example, the bottom left-hand cell represents the input combination A = 1 and B = 0 for the two-variable map (Figure 2.6a), A = 1, B = 0, and C = 0 for the three-variable map (Figure 2.6b), and A = 1, B = 0, C = 0, and D = 0 for the four-variable map (Figure 2.6c).

The basic idea behind this method is to label cells such that the neighboring cells differ in only one input bit position. This is the reason why the cells are labeled 00, 01, 11, 10 (notice the change in the order of the last two labels from the normal binary number order). What we are doing is labeling with a Hamming distance of 1. Hamming distance is the number of bit positions in which

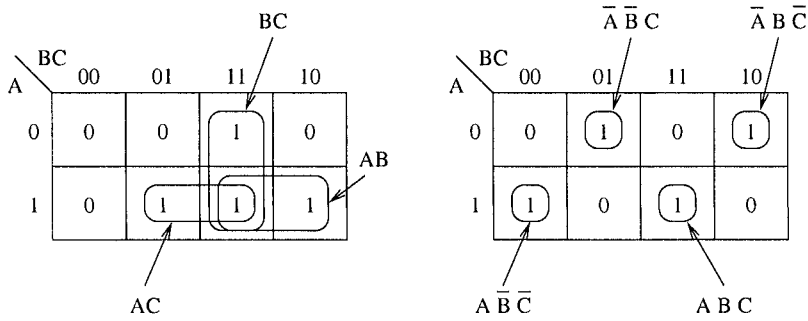

(a) Majority function

(b) Even-parity function

Figure 2.7 Three-variable logical expression simplification using the Karnaugh map method: (a) majority function; (b) even-parity function.

two binary numbers differ. This labeling is also called *gray code*. Why are we so interested in this gray code labeling? Simply because we can then eliminate a variable as the following holds:

$$A\,B\,\overline{C}\,D + A\,B\,C\,D = A\,B\,D.$$

Figure 2.7 shows how the maps are used to obtain minimal sum-of-products expressions for three-variable logical expressions. Notice that each cell is filled with the output value of the function corresponding to the input combination for that cell. After the map of a logical function is obtained, we can derive a simplified logical expression by grouping neighboring cells with 1 into areas. Let us first concentrate on the majority function map shown in Figure 2.7a. The two cells in the third column are combined into one area. These two cells represent inputs $\overline{A}\,B\,C$ (top cell) and A B C (bottom cell). We can, therefore, combine these two cells to yield a product term B C. Similarly, we can combine the three 1s in the bottom row into two areas of two cells each. The corresponding product terms for these two areas are A C and A B as shown in Figure 2.7a. Now we can write the minimal expression as B C + A C + A B, which is what we got in the last section using the algebraic simplification process. Notice that the cell for A B C (third cell in the bottom row) participates in all three areas. This is fine. What this means is that we need to duplicate this term two times to simplify the expression. This is exactly what we did in our algebraic simplification procedure.

We now have the necessary intuition to develop the required rules for simplification. These simple rules govern the simplification process:

1. Form regular areas that contain 2^i cells, where $i \geq 0$. What we mean by a regular area is that they can be either rectangles or squares. For example, we cannot use an "L" shaped area.
2. Use a minimum number of areas to cover all cells with 1. This implies that we should form as large an area as possible and redundant areas should be eliminated.

Once minimal areas have been formed, we write a logical expression for each area. These represent terms in the sum-of-products expressions. We can write the final expression by connecting the terms with OR.

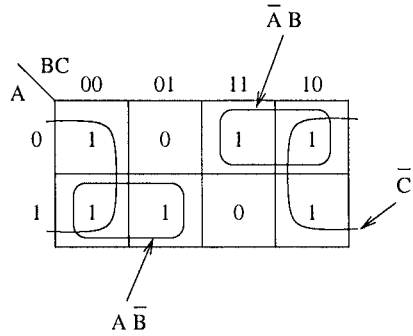

Figure 2.8 An example Karnaugh map that uses the fact that the first and last columns are adjacent.

In Figure 2.7a, we cannot form a regular area with four cells. Next we have to see if we can form areas of two cells. The answer is yes. Let us assume that we first formed a vertical area (labeled B C). That leaves two 1s uncovered by an area. So, we form two more areas to cover these two 1s. We also make sure that we indeed need these three areas to cover all 1s. Our next step is to write the logical expression for these areas.

When writing an expression for an area, look at the values of a variable that is 0 as well as 1. For example, for the area identified by B C, the variable A has 0 and 1. That is, the two cells we are combining represent $\overline{A}$ B C and A B C. Thus, we can eliminate variable A. The variables B and C have the same value for the whole area. Since they both have the value 1, we write B C as the expression for this area. It is straightforward to see that the other two areas are represented by A C and A B.

If we look at the Karnaugh map for the even-parity function (Figure 2.7b), we find that we cannot form areas bigger than one cell. This tells us that no further simplification is possible for this function.

Note that, in the three-variable maps, the first and last columns are adjacent. We did not need this fact in our previous two examples. You can visualize the Karnaugh map as a tube, cut open to draw in two dimensions. This fact is important because we can combine these two columns into a square area as shown in Figure 2.8. This square area is represented by $\overline{C}$.

You might have noticed that we can eliminate $\log_2 n$ variables from the product term, where n is the number of cells in the area. For example, the four-cell square in Figure 2.8 eliminates two variables from the product term that represents this area.

Figure 2.9 shows an example of a four-variable logical expression simplification using the Karnaugh map method. *It is important to remember the fact that first and last columns as well as first and last rows are adjacent.* Then it is not difficult to see why the four corner cells form a regular area and are represented by the expression $\overline{B}\,\overline{D}$. In writing an expression for an area, look at the input variables and ignore those that assume both 0 and 1. For example, for this weird square area, looking at the first and last rows, we notice that variable A has 0 for the first row and 1 for the last row. Thus, we eliminate A. Since B has a value of 0, we use $\overline{B}$. Similarly, by looking at the first and last columns, we eliminate C. We use $\overline{D}$ as D has a value of 0. Thus, the expression for this area is $\overline{B}\,\overline{D}$. Following our simplification procedure to cover all cells with 1, we get the

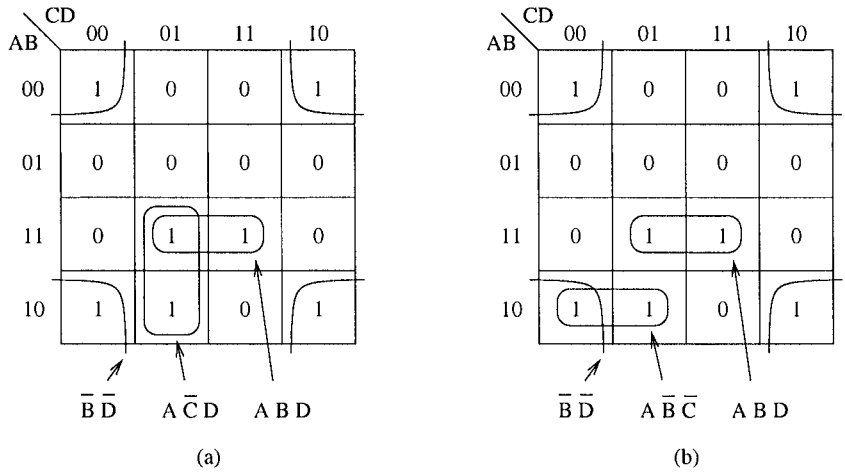

Figure 2.9 Different minimal expressions will result depending on the groupings.

following minimal expression for Figure 2.9a:

$$\overline{B}\,\overline{D} + A\overline{C}D + ABD.$$

We also note from Figure 2.9 that a different grouping leads to a different minimal expression. The logical expression for Figure 2.9b is

$$\overline{B}\,\overline{D} + A\overline{B}\,\overline{C} + ABD.$$

Even though this expression is slightly different from the logical expression obtained from Figure 2.9a, both expressions are minimal and logically equivalent.

The best way to understand the Karnaugh map method is to practice until you develop your intuition. After that, it is unlikely you will ever forget how this method works even if you have not used it in years.

Combinational Circuits

So far, we have focused on implementations using only the basic gates. One key characteristic of the circuits that we have designed so far is that the output of the circuit is a function of the inputs. Such devices are called *combinational circuits* as the output can be expressed as a combination of the inputs. We continue our discussion of combinational circuits in this section.

Although gate-level abstraction is better than working at the transistor level, a higher level of abstraction is needed in designing and building complex digital systems. We now discuss some combinational circuits that provide this higher level of abstraction.

Higher-level abstraction helps the digital circuit design and implementation process in several ways. The most important ones are the following:

1. Higher-level abstraction helps us in the logical design process as we can use functional building blocks that typically require several gates to implement. This, therefore, reduces the complexity.

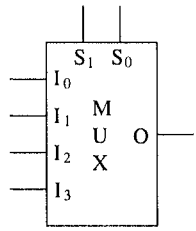

S_1	S_0	O
0	0	I_0
0	1	I_1
1	0	I_2
1	1	I_3

Figure 2.10 A 4-data input multiplexer block diagram and truth table.

2. The other equally important point is that the use of these higher-level functional devices reduces the chip count to implement a complex logical function.

The second point is important from the practical viewpoint. If you look at a typical motherboard, these low-level gates take a lot of area on the printed circuit board (PCB). Even though the low-level gate chips were introduced in the 1970s, you still find them sprinkled on your PCB along with your Pentium processor. In fact, they seem to take more space. Thus, reducing the chip count is important to make your circuit compact. The combinational circuits provide one mechanism to incorporate a higher level of integration.

The reduced chip count also helps in reducing the production cost (fewer ICs to insert and solder) and improving the reliability. Several combinational circuits are available for implementation. Here we look at a sampler of these circuits.

Multiplexers

A multiplexer (MUX) is characterized by 2^n data inputs, n selection inputs, and a single output. The block diagram representation of a 4-input multiplexer (4-to-1 multiplexer) is shown in Figure 2.10. The multiplexer connects one of 2^n inputs, selected by the selection inputs, to the output. Treating the selection input as a binary number, data input I_i is connected to the output when the selection input is i as shown in Figure 2.10.

Figure 2.11 shows an implementation of a 4-to-1 multiplexer. If you look closely, it somewhat resembles our logic circuit used by the brute force method for implementing sum-of-products expressions (compare this figure with Figure 2.3 on page 16). This visual observation is useful in developing our intuition about one important property of the multiplexers: we can implement any logical function using only multiplexers. The best thing about using multiplexers in implementing a logical function is that you don't have to simplify the logical expression. We can proceed directly from the truth table to implementation, using the multiplexer as the building block.

How do we implement a truth table using the multiplexer? Simple. Connect the logical variables in the logical expression as the selection inputs and the function outputs as constants to the data inputs. To follow this straightforward implementation, we need a 2^b data input multiplexer with b selection inputs to implement a b variable logical expression. The process is best illustrated by means of an example.

Figure 2.12 shows how an 8-to-1 multiplexer can be used to implement our two running examples: the 3-input majority and 3-input even-parity functions. From these examples, you can see that the data input is simply a copy of the output column in the corresponding truth table. You just need to take care how you connect the logical variables: connect the most significant variable in the truth table to the most significant selection input of the multiplexer as shown in Figure 2.12.

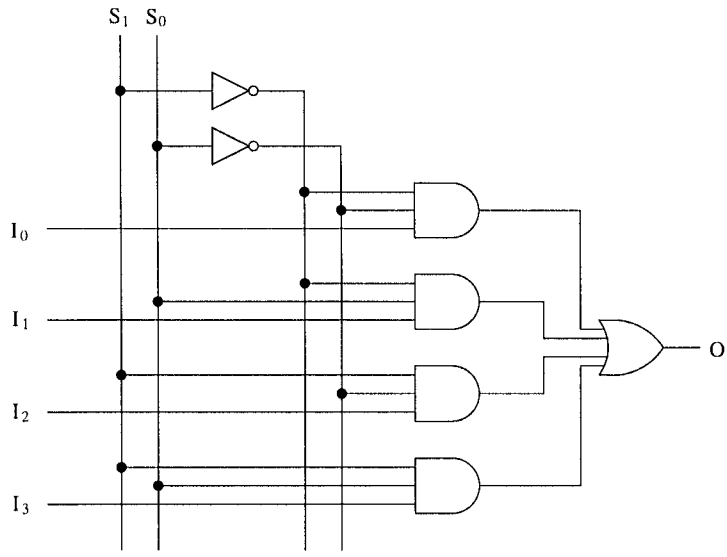

Figure 2.11 A 4-to-1 multiplexer implementation using the basic gates.

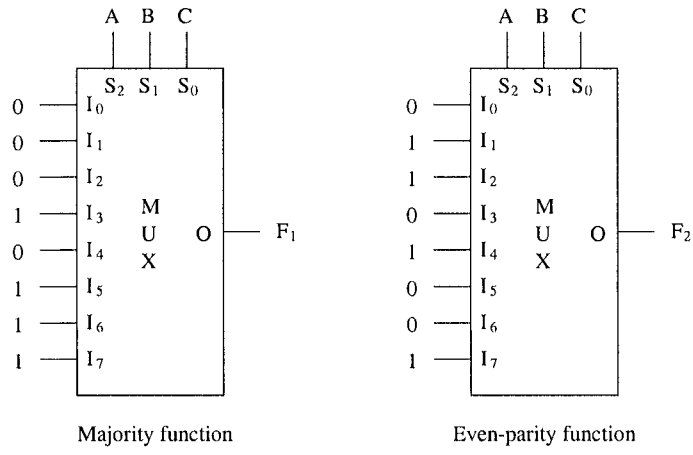

Figure 2.12 Two example implementations using an 8-to-1 multiplexer.

Demultiplexers

The demultiplexer (DeMUX) performs the complementary operation of a multiplexer. As in the multiplexer, a demultiplexer has n selection inputs. However, the roles of data input and output are reversed. In a demultiplexer with n selection inputs, there are 2^n data outputs and one data input.

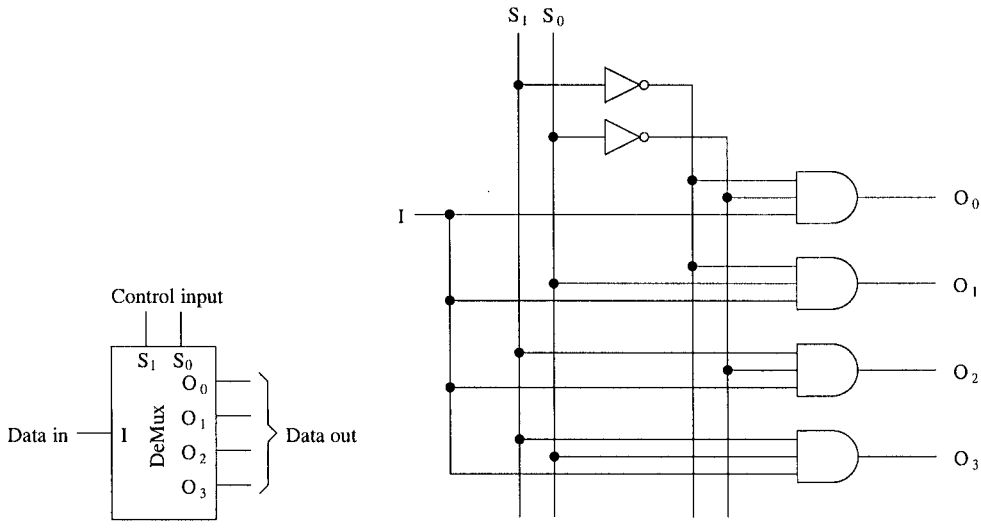

Figure 2.13 Demultiplexer block diagram and its implementation.

Depending on the value of the selection input, the data input is connected to the corresponding data output. The block diagram and the implementation of a 4-data out demultiplexer is shown in Figure 2.13.

Decoders

The decoder is another basic building block that is useful in selecting one-out-of-N lines. The input to a decoder is an I-bit binary (i.e., encoded) number and the output is 2^I bits of decoded data. Figure 2.14 shows a 2-to-4 decoder and its logical implementation. Among the 2^I outputs of a decoder, only one output line is 1 at any time as shown in the truth table (Figure 2.14). In the next chapter we show how decoders are useful in designing system memory.

Comparators

Comparators are useful for implementing relational operations such as =, <, >, and so on. For example, we can use XOR gates to test whether two numbers are equal. Figure 2.15 shows a 4-bit comparator that outputs 1 if the two 4-bit input numbers $A = A_3A_2A_1A_0$ and $B = B_3B_2B_1B_0$ match. However, implementing < and > is more involved than testing for equality. While equality can be established by comparing bit by bit, positional weights must be taken into consideration when comparing two numbers for < and >. We leave it as an exercise to design such a circuit.

Adders

We now look at adder circuits that provide the basic capability to perform arithmetic operations. The simplest of the adders is called a *half-adder*, which adds two bits and produces a sum and carry output as shown in Figure 2.16a. From the truth table it is straightforward to see that the

I_1	I_0	O_3	O_2	O_1	O_0
0	0	0	0	0	1
0	1	0	0	1	0
1	0	0	1	0	0
1	1	1	0	0	0

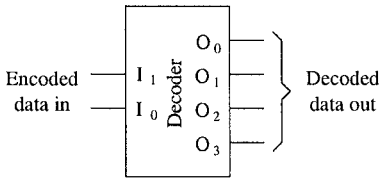

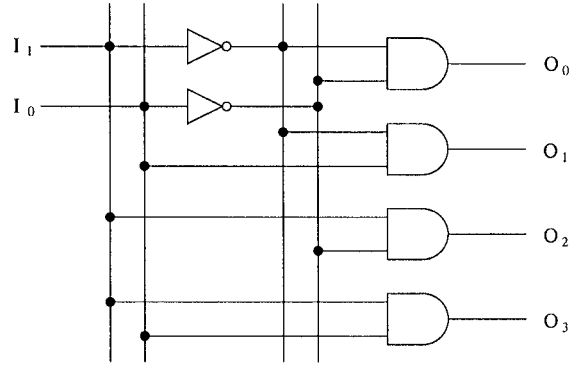

Figure 2.14 Decoder block diagram and its implementation.

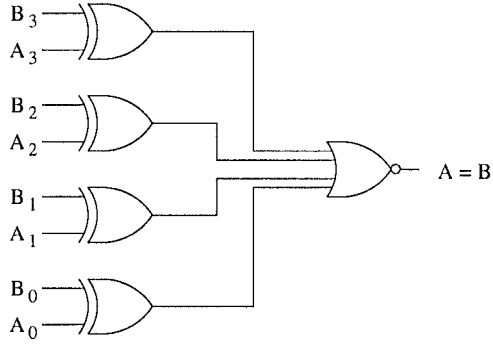

Figure 2.15 A 4-bit comparator implementation using XOR gates.

carry output C_{out} can be generated by a single AND gate and the sum output by a single XOR gate.

The problem with the half-adder is that we cannot use it to build adders that can add more than two 1-bit numbers. If we want to use the 1-bit adder as a building block to construct larger adders that can add two N-bit numbers, we need an adder that takes the two input bits and a potential carry generated by the previous bit position. This is what the *full-adder* does. A full adder takes three bits and produces two outputs as shown in Figure 2.16b. An implementation of the full-adder is shown in Figure 2.16.

Using full adders, it is straightforward to build an adder that can add two N-bit numbers. An example 16-bit adder is shown in Figure 2.17. Such adders are called *ripple-carry adders* as the carry ripples through bit positions 1 through 15. Let us assume that this ripple-carry adder is using the full adder shown in Figure 2.16b. If we assume a gate delay of 5 ns, each full adder takes three gate delays (=15 ns) to generate C_{out}. Thus, the 16-bit ripple-carry adder shown in Figure 2.17

A	B	Sum	C_{out}
0	0	0	0
0	1	1	0
1	0	1	0
1	1	0	1

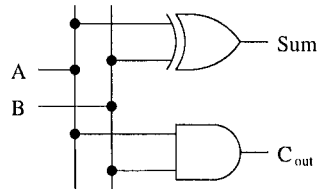

(a) Half-adder truth table and implementation

A	B	C_{in}	Sum	C_{out}
0	0	0	0	0
0	0	1	1	0
0	1	0	1	0
0	1	1	0	1
1	0	0	1	0
1	0	1	0	1
1	1	0	0	1
1	1	1	1	1

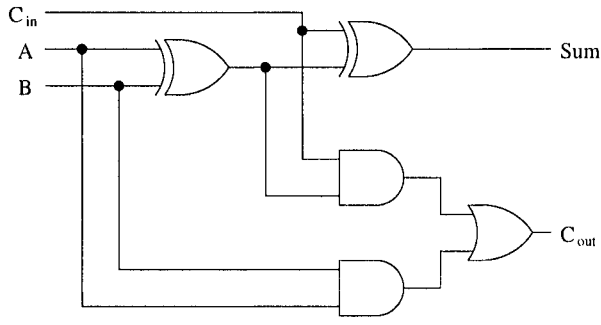

(b) Full-adder truth table and implementation

Figure 2.16 Full- and half-adder truth tables and implementations.

takes $16 \times 15 = 240$ ns. If we were to use this type of adder circuit in a system, it cannot run more than 1/240 ns = 4 MHz with each addition taking about a clock cycle.

How can we speed up multibit adders? If we analyze the reasons for the "slowness" of the ripple-carry adders, we see that carry propagation is causing the delay in producing the final N-bit output. If we want to improve the performance, we have to remove this dependency and determine the required carry-in for each bit position independently. Such adders are called *carry lookahead adders*. The main problem with these adders is that they are complex to implement for long words. To see why this is so and also to give you an idea of how each full adder can generate its own carry-in bit, let us look at the logical expression that should be implemented to generate the carry-in. Carry-out from the rightmost bit position C_0 is obtained as

$$C_0 = A_0 B_0 .$$

C_1 is given by

$$C_1 = C_0 (A_1 + B_1) + A_1 B_1 .$$

By substituting $A_0 B_0$ for C_0, we get

$$C_1 = A_0 B_0 A_1 + A_0 B_0 B_1 + A_1 B_1 .$$

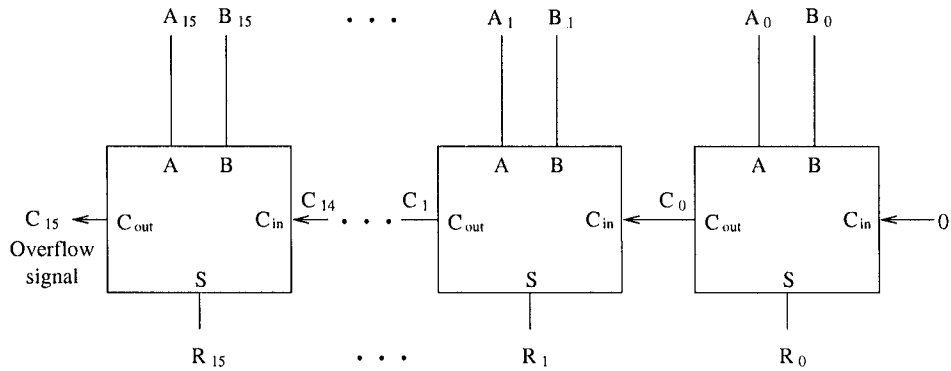

Figure 2.17 A 16-bit ripple-carry adder using the full adder building blocks.

Similarly, we get C_2 as

$$\begin{aligned} C_2 &= C_1 (A_2 + B_2) + A_2 B_2 \\ &= A_2 A_0 B_0 A_1 + A_2 A_0 B_0 B_1 + A_2 A_1 B_1 \\ &\quad + B_2 A_0 B_0 A_1 + B_2 A_0 B_0 B_1 + B_2 A_1 B_1 + A_2 B_2 . \end{aligned}$$

Using this procedure, we can generate the necessary carry-in inputs independently. The logical expression for C_i is a sum-of-products expression involving only A_k and B_k, $i \leq k \leq 0$. Thus, independent of the length of the word, only two gate delays are involved, assuming a single gate can implement each product term. The complexity of implementing such a circuit makes it impractical for more than 8-bit words. Typically, carry lookahead is implemented at the 4- or 8-bit level. We can apply our ripple-carry method of building higher word length adders by using these 4- or 8-bit carry lookahead adders.

Programmable Logic Devices

We have seen several ways of implementing sum-of-products expressions. Programmable logic devices provide yet another way to implement these expressions. There are two types of these devices that are very similar to each other. The next two subsections describe these devices.

Programmable Logic Arrays (PLAs)

PLA is a field programmable device to implement sum-of-product expressions. It consists of an AND array and an OR array as shown in Figure 2.18. A PLA takes N inputs and produces M outputs. Each input is a logical variable. Each output of a PLA represents a logical function output. Internally, each input is complemented, and a total of $2N$ inputs is connected to each AND gate in the AND array through a fuse. The example PLA, shown in Figure 2.18, is a 2×2 PLA with two inputs and two outputs. Each AND gate receives four inputs: I_0, $\bar{I}_0$, I_1, and $\bar{I}_1$. The fuses are shown as small white rectangles. Each AND gate can be used to implement a product term in the sum-of-products expression.

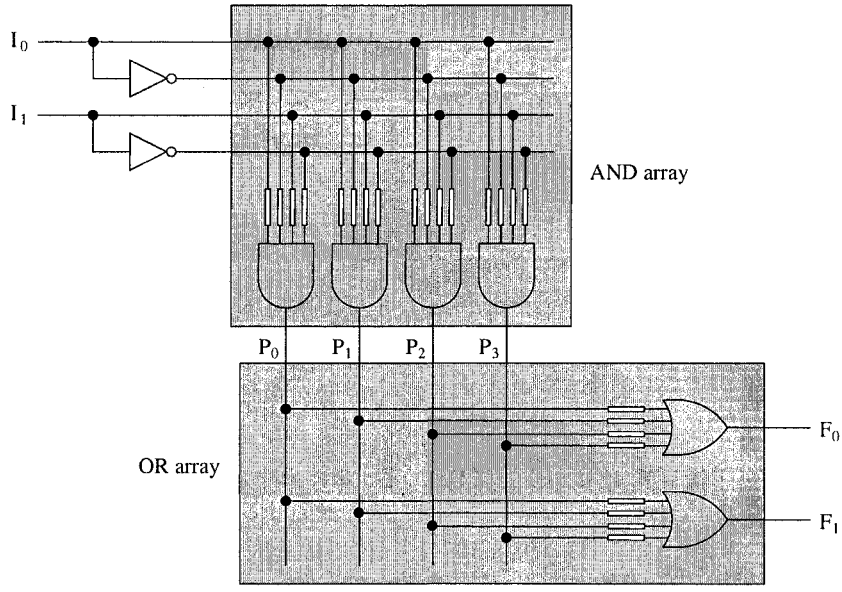

Figure 2.18 An example PLA with two inputs and two outputs.

The OR array is organized similarly except that the inputs to the OR gates are the outputs of the AND array. Thus, the number of inputs to each OR gate is equal to the number of AND gates in the AND array. The output of each OR gate represents a function output.

When the chip is shipped from the factory, all fuses are intact. We program the PLA by selectively blowing some fuses (generally by passing a high current through them). The chip design guarantees that an input with a blown fuse acts as 1 for the AND gates and as 0 for the OR gates.

Figure 2.19 shows an example implementation of functions F_0 and F_1. The rightmost AND gate in the AND array produces the product term AB. To produce this output, the inputs of this gate are programmed by blowing the second and fourth fuses that connect inputs $\overline{A}$ and $\overline{B}$, respectively. Programming a PLA to implement a sum-of-products function involves implementing each product term by an AND gate. Then a single OR gate in the OR array is used to obtain the final function. In Figure 2.19, we are using two product terms generated by the middle two AND gates (P_1 and P_2) as inputs to both OR gates as these two terms appear in both F_0 and F_1.

To simplify specification of the connections, the notation shown in Figure 2.20 is used. Each AND and OR gate input is represented by a single line. A $\times$ is placed if the corresponding input is connected to the AND or OR gates as shown in this figure.

Programmable Array Logic Devices (PALs)

PLAs are very flexible in implementing sum-of-products expressions. However, the cost of providing a large number of fuses is high. For example, a 12×12 PLA with a 50-gate AND array and 12-gate OR array requires $24 \times 50 = 1200$ fuses for the AND array and $50 \times 12 = 600$ fuses for the OR array for a total of 1800 fuses. We can reduce this complexity by noting that we can

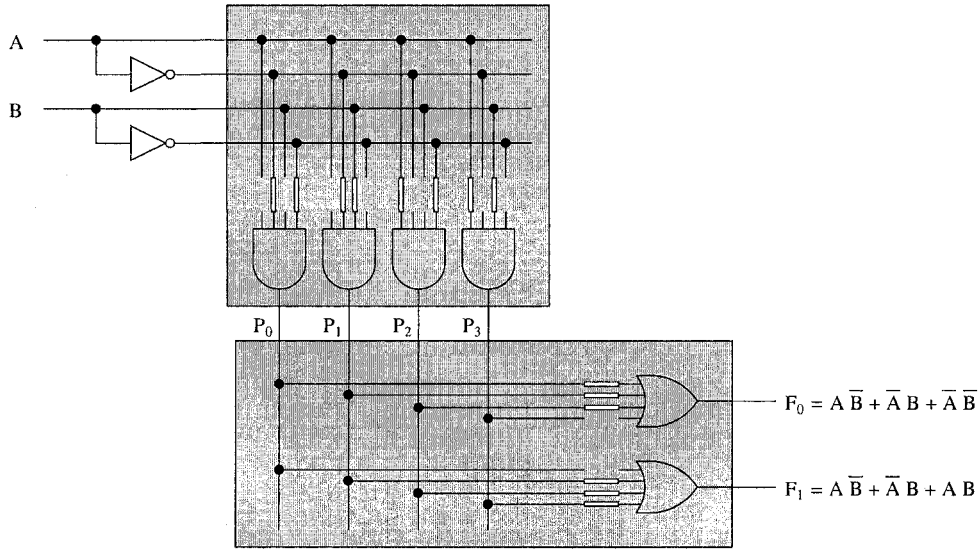

Figure 2.19 Implementation of functions F_0 and F_1 using the example PLA.

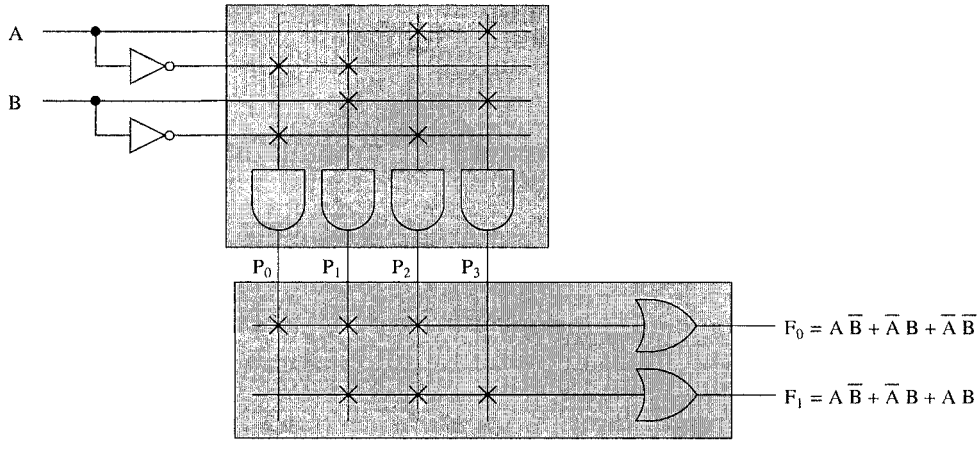

Figure 2.20 A simplified notation to show implementation details of a PLA.

retain most of the flexibility by cutting down the set of fuses in the OR array. This is the rationale for PALs. Due to their cost advantage, most manufacturers produce only PALs.

PALs are very similar to PLAs except that there is no programmable OR array. Instead, the OR connections are fixed. Figure 2.21 shows a PAL with the bottom OR gate connected to the leftmost two product terms and the other OR gate connected to the other two product terms. As a

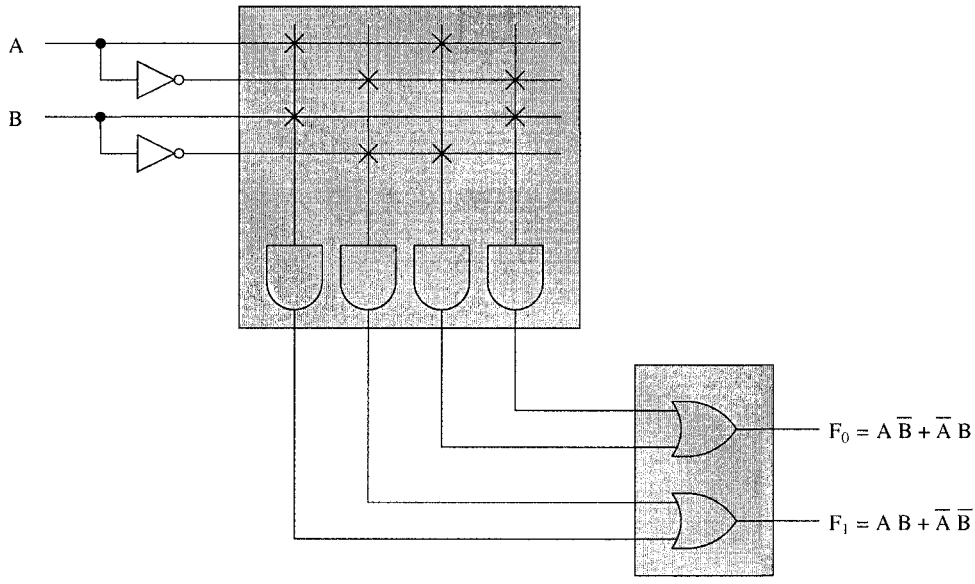

Figure 2.21 Programmable array logic device with fixed OR gate connections. We have used the simplified notation to indicate the connections in the AND array.

result of these connections, we cannot implement the two functions shown in Figure 2.20. This is the loss of flexibility that sometimes may cause problems but in practice is not such a big problem. But the advantage of PAL devices is that we can cut down all the OR array fuses that are present in a PLA. In the last example, we reduce the number of fuses by a third—from 1800 fuses to 1200.

Arithmetic and Logic Units

We are now ready to design our own arithmetic and logic unit. The ALU forms the computational core of a processor, performing basic arithmetic and logical operations such as integer addition, subtraction, and logical AND and OR functions. Figure 2.22 shows an example ALU that can perform two arithmetic functions (addition and subtraction) and two logical functions (AND and OR). We use a multiplexer to select one of the four functions. The implementation is straightforward except that we implement the subtractor using a full adder by negating the B input.

To see why this is so, you need to understand the 2's complement representation for negative numbers. A detailed discussion of this number representation is given in Appendix A (see page 468). Here we give a brief explanation. The operation $(x - y)$ is treated as adding $-y$ to x. That is, $(x - y)$ is implemented as $x + (-y)$ so that we can use an adder to perform subtraction. For example, $12 - 5$ is implemented by adding -5 to 12. In the 2's complement notation, -5 is represented as `1011B`, which is obtained by complementing the bits of number 5 and adding 1. This operation produces the correct result as shown below:

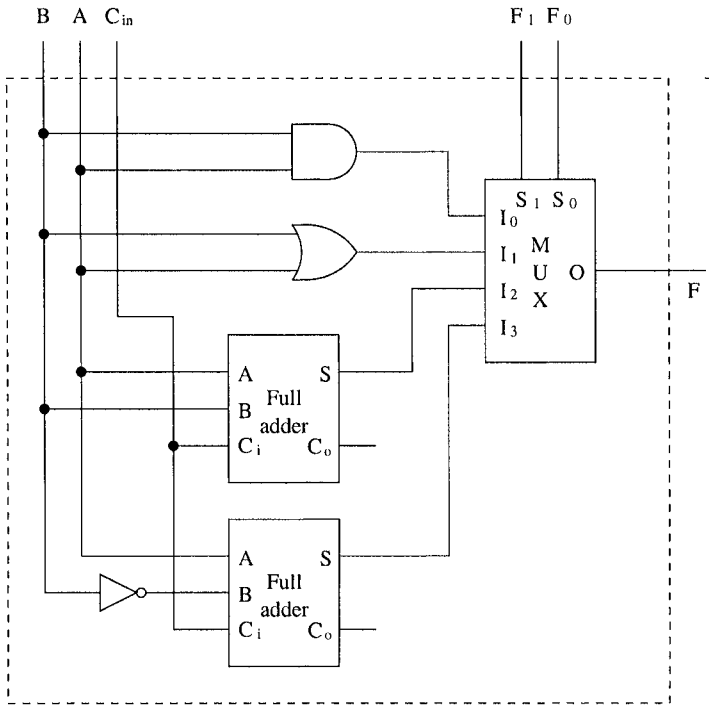

F_1	F_0	F
0	0	A and B
0	1	A or B
1	0	A + B
1	1	A − B

Figure 2.22 A simple 1-bit ALU that can perform addition, subtraction, AND, and OR operations. The carry output of the circuit is incomplete in this figure as a better and more efficient circuit is shown in the next figure. Note: "+" and "−" represent arithmetic addition and subtraction operations, respectively.

```
12D = 1100B
-5D = 1011B
      0111B = 7D
```

To implement the subtract operation, we first convert B to −B in 2's complement representation. We get the 2's complement representation by complementing the bits and adding 1. We need an inverter to complement. The required 1 is added via C_{in}.

Since the difference between the adder and subtractor is really the negation of the one input, we can get a better circuit by using a programmable inverter. Figure 2.23 shows the final design with the XOR gate acting as a programmable inverter. Remember that, when one of the inputs is one, the XOR gate acts as an inverter for the other input. We can use these 1-bit ALUs to get word-length ALUs. Figure 2.24 shows an implementation of a 16-bit ALU using the 1-bit ALU of Figure 2.23.

To illustrate how the circuit in Figure 2.24 subtracts two 16-bit numbers, let us consider an example with A = 1001 1110 1101 1110 and B = 0110 1011 0110 1101. Since B is internally complemented, we get $\overline{B}$ = 1001 0100 1001 0010. Now we add A and $\overline{B}$ with the carry-in to the rightmost bit set to 1 (through the F_0 bit):

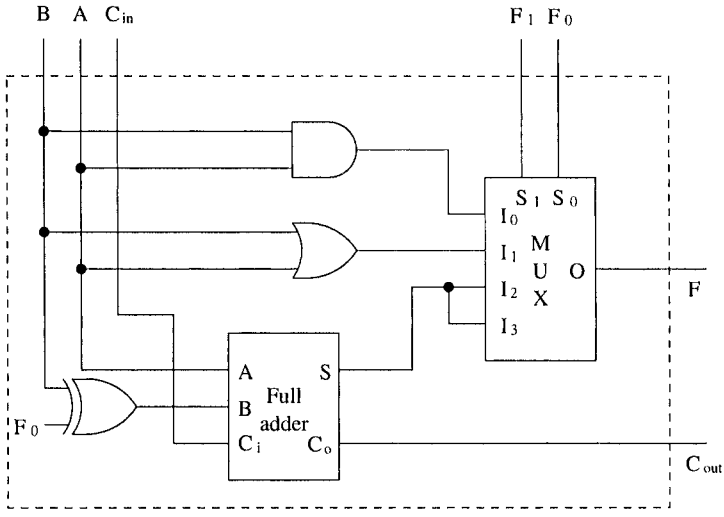

Figure 2.23 A better 1-bit ALU that uses a single full adder for both addition and subtraction operations.

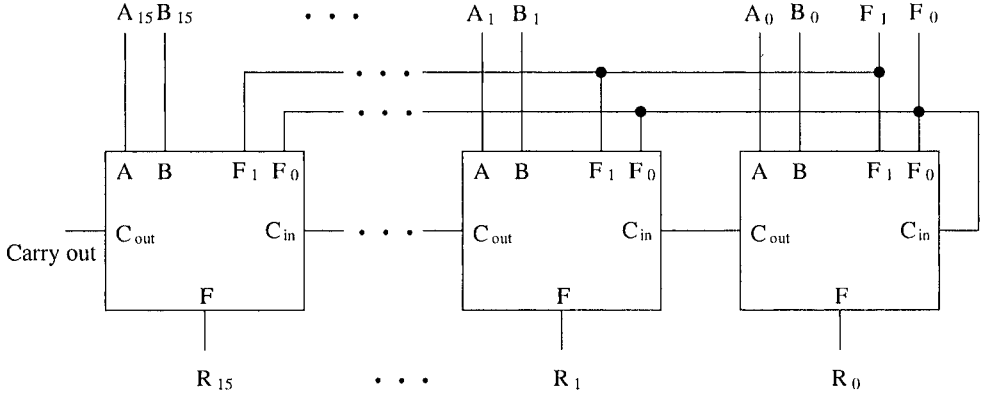

Figure 2.24 A 16-bit ALU built with the 1-bit ALU: The F_0 function bit sets C_{in} to 1 for the subtract operation. Logical operations ignore the carry bits.

```
                                  1 ← carry-in from F0
A     =  1001 1110 1101 1110
B̄     =  1001 0100 1001 0010
A − B =  0011 0011 0111 0001
```

which is the correct value. If B is larger than A, we get a negative number. In this case, the result

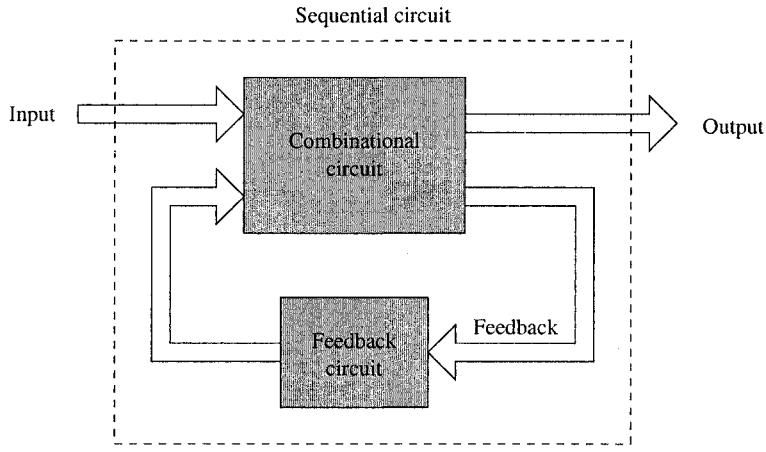

Figure 2.25 Main components of a sequential circuit.

will be in the 2's complement form. Also note that, in the 2's complement representation, we ignore any carry generated out of the most significant bit.

Sequential Circuits

The output of a combinational circuit depends only on the current inputs. In contrast, the output of a sequential circuit depends both on the current input values as well as the past inputs. This dependence on past inputs gives the property of "memory" for sequential circuits.

In general, the sequence of past inputs is encoded into a set of state variables. There is a feedback path that feeds these variables to the input of a combinational circuit as shown in Figure 2.25. Sometimes, this feedback consists of a simple interconnection of some outputs of the combinational circuit to its inputs. For the most part, however, the feedback circuit consists of elements such as flip-flops that we discuss later. These elements themselves are sequential circuits that can remember or store the state information. Next we introduce system clock to incorporate time into digital circuits.

System Clock

Digital circuits can operate in *asynchronous* or *synchronous* mode. Circuits that operate in asynchronous mode are independent of each other. That is, the time at which a change occurs in one circuit has no relation to the time a change occurs in another circuit. Asynchronous mode of operation causes serious problems in a typical digital system in which the output of one circuit goes as input to several others. Similarly, a single circuit may receive outputs of several circuits as inputs. Asynchronous mode of operation implies that all required inputs to a circuit may not be valid at the same time.

To avoid these problems, circuits are operated in synchronous mode. In this mode, all circuits in the system change their state at some precisely defined instants. The clock signal provides such

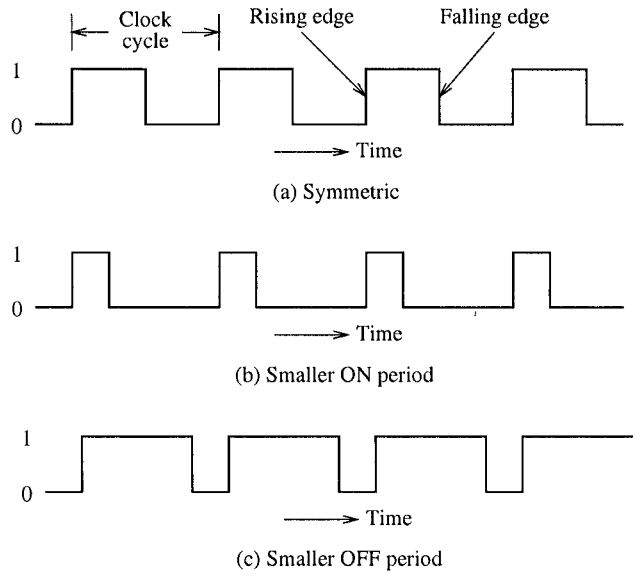

Figure 2.26 Three types of clock signals with the same clock period.

a global definition of time instants at which changes can take place. Implicit in this definition is the fact that the clock signal also specifies the speed at which a circuit can operate.

A clock is a sequence of 1s and 0s as shown in Figure 2.26. We refer to the period during which the clock is 1 as the ON period and the period with 0 as the OFF period. Even though we normally use symmetric clock signals with equal ON and OFF periods as in Figure 2.26a, clock signals can take asymmetric forms as shown in Figures 2.26b and c.

The clock signal edge going from 0 to 1 is referred to as the *rising edge* (also called the positive or leading edge). Analogously, we can define a *falling edge* as shown in Figure 2.26a. The falling edge is also referred to as a negative or trailing edge.

A clock cycle is defined as the time between two successive rising edges as shown in Figure 2.26. You can also treat the period between successive falling edges as a clock cycle.

Clock rate or frequency is measured in number of cycles per second. This number is referred to as Hertz (Hz). The clock period is defined as the time represented by one clock cycle. All three clock signals in Figure 2.26 have the same clock period.

$$\text{Clock period} = \frac{1}{\text{Clock frequency}}.$$

For example, a clock frequency of 1 GHz yields a clock period of

$$\frac{1}{1 \times 10^9} = 1 \text{ ns}.$$

Note that one nanosecond (ns) is equal to 10^{-9} second.

The clock signal serves two distinct purposes in a digital circuit. It provides the global synchronization signal for the entire system. Each clock cycle provides three distinct epochs: start of

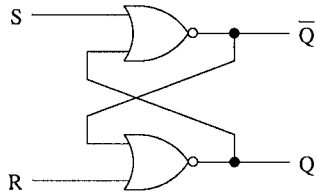

(a) Circuit diagram

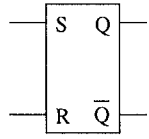

(b) Logic symbol

S	R	Q_{n+1}
0	0	Q_n
0	1	0
1	0	1
~~1~~	~~1~~	~~0~~

(c) Truth table

Figure 2.27 A NOR gate implementation of the SR latch.

a clock cycle, end of a clock cycle, and an intermediate point at which the clock signal changes levels. This intermediate point is in the middle of a clock cycle for symmetric clock signals. The other equally important purpose is to provide timing information in the form of a clock period.

Latches

It is time to look at some simple sequential circuits that can remember a single bit value. We discuss latches in this section. Latches are level-sensitive devices in that the device responds to the input signal levels (high or low). In contrast, flip-flops are edge-triggered. That is, output changes only at either the rising or falling edge. We look at flip-flops in the next section.

SR Latch

The SR latch is the simplest of the sequential circuits that we consider. It requires just two NOR gates. The feedback in this latch is a simple connection from the output of one NOR gate to the input of the other NOR gate as shown in Figure 2.27a. The logic symbol for the SR latch is shown in Figure 2.27b.

A simplified truth table for the SR latch is shown in Figure 2.27c. The outputs of the two NOR gates are labeled Q and $\overline{Q}$ because these two outputs should be complementary in normal operating mode. We use the notation Q_n to represent the current value (i.e., current state) and Q_{n+1} to represent the next value (i.e., next state).

Let us analyze the truth table. First consider the two straightforward cases. When S = 0 and R = 1, we can see that independent of the current state, output Q is forced to be 0 as R is 1. Thus, the two inputs to the upper NOR gate are 0. This leads $\overline{Q}$ to be 1. This is a stable state. That is, Q and $\overline{Q}$ can stay at 0 and 1, respectively. You can verify that when S = 1 and R = 0, another stable state Q = 1 and $\overline{Q}$ = 0 results.

When both S and R are zero, the next output depends on the current output. Assume that the current output is Q = 1 and $\overline{Q}$ = 0. Thus, when you change inputs from S = 1 and R = 0 to S = R = 0, the next state Q_{n+1} remains the same as the current state Q_n. Now assume that the current state is Q = 0 and $\overline{Q}$ = 1. It is straightforward to verify that changing inputs from S = 0 and R = 1 to S = R = 0, leaves the output unchanged. We have summarized this behavior by placing Q_n as the output for S = R = 0 in the first row of Figure 2.27c.

What happens when both S and R are 1? As long as these two inputs are held high, both outputs are forced to take 0. We struck this state from the truth table to indicate that this input combination is undesirable. To see why this is the case, consider what happens when S and R

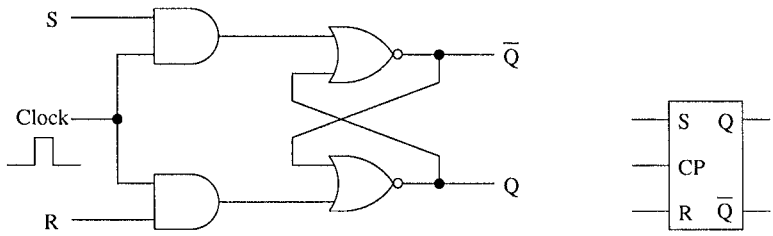

(a) Circuit diagram (b) Logic symbol

Figure 2.28 Clocked SR latch.

inputs are changed from S = R = 1 to S = R = 0. It is only in theory that we can assume that both inputs change simultaneously. In practice, there is always some finite time difference between the two signal changes. If the S input goes low earlier than the R signal, the sequence of input changes is SR = 11 → 01 → 00. Because of the intermediate state SR = 01, the output will be Q = 0 and $\overline{Q}$ = 1.

If, on the other hand, the R signal goes low before the S signal does, the sequence of input changes is SR = 11 → 10 → 00. Because the transition goes through the SR = 10 intermediate state, the output will be Q = 1 and $\overline{Q}$ = 0. Thus, when the input changes from 11 to 00, the output is indeterminate. This is the reason we want to avoid this state.

The inputs S and R stand for "Set" and "Reset," respectively. When the set input is high (and reset is low), Q is set (i.e., Q = 1). On the other hand, if set is 0 and reset is 1, Q is reset or cleared (i.e., Q = 0).

From this discussion, it is clear that this latch is level sensitive. The outputs respond to changes in input levels. This is true for all the latches.

We notice that this simple latch has the capability to store a bit. To write 1 into this latch, set SR as 10; to write 0, use SR = 01. To retain a stored bit, keep both S and R inputs at 0. In summary, we have the capacity to write 0 or 1 and retain it as long as there is power to the circuit. This is the basic 1-bit cell that static RAMs use. Once we have the design to store a single bit, we can replicate this circuit to store wider data as well as multiple words. We look at memory design issues in the next chapter.

Clocked SR Latch

A basic problem with the SR latch is that the output follows the changes in the input. If we want to make the output respond to changes in the input at specific instants in order to synchronize with the rest of the system, we have to modify the circuit as shown in Figure 2.28a. The main change is that a clock input is used to gate the S and R inputs. These inputs are passed onto the original SR latch only when the clock signal is high. The inputs have no effect on the output when the clock signal is low. When the clock signal is high, the circuit implements the truth table of the SR latch given in Figure 2.27c. This latch is level sensitive as well. As long as the clock signal is high, the output responds to the SR inputs.

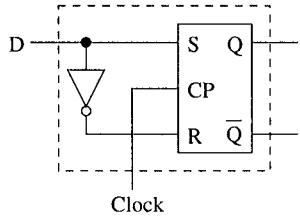

(a) Circuit diagram

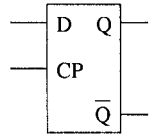

(b) Logic symbol

D	Q_{n+1}
0	0
1	1

(c) Truth table

Figure 2.29 D latch uses an inverter to avoid the SR = 11 input combination.

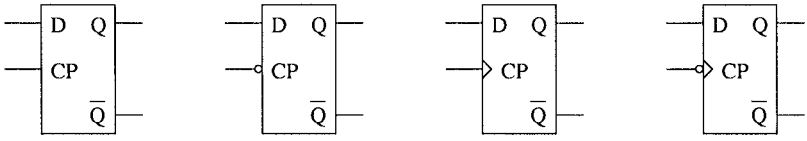

(a) (b) (c) (d)

Figure 2.30 Logic symbol notation for latches and flip-flops: (a) high level-sensitive latch; (b) low level-sensitive latch; (c) positive edge-triggered flip-flop; (d) negative edge-triggered flip-flop.

D Latch

A problem with both versions of SR latches is that we have to avoid the SR = 11 input combination. This problem is solved by the D latch shown in Figure 2.29a. We use a single inverter to provide only complementary inputs at S and R inputs of the clocked SR latch. To retain the value, we maintain the clock input at 0. The logic symbol and the truth table for the D latch clearly show that it can store a single bit.

Storing a bit in the D-latch is straightforward. All we have to do is feed the data bit to the D input and apply a clock pulse to store the bit. Once stored, the latch retains the bit as long as the clock input is zero. This simple circuit is our first 1-bit memory. In the next chapter, we show how we can use this basic building block to design larger memories.

Flip-Flops

We have noted that flip-flops are edge-triggered devices whereas latches are level sensitive. In the logic symbol, we use an arrowhead on the clock input to indicate a positive edge-triggered flip-flop as shown in Figure 2.30c. The absence of this arrowhead indicates a high level-sensitive latch (see Figure 2.30a). We add a bubble in front of the clock input to indicate a negative edge-triggered flip-flop (Figure 2.30d) or a low level-sensitive latch (Figure 2.30b).

As is obvious from the bubble notation, we can convert a high level-sensitive latch to a low level-sensitive one by feeding the clock signal through an inverter. Recall that the bubble represents an inverter (see page 17). Similarly, we can invert the clock signal to change a negative edge-triggered flip-flop to a positive edge-triggered one.

J	K	Q_{n+1}
0	0	Q_n
0	1	0
1	0	1
1	1	$\overline{Q}_n$

(a) Truth table

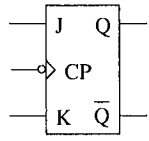

(b) Logic symbol

Figure 2.31 Truth table and logic symbol of the JK flip-flop. The logic symbol is for a negative edge triggered flip-flop. For a negative flip-flop, delete the bubble on the clock input.

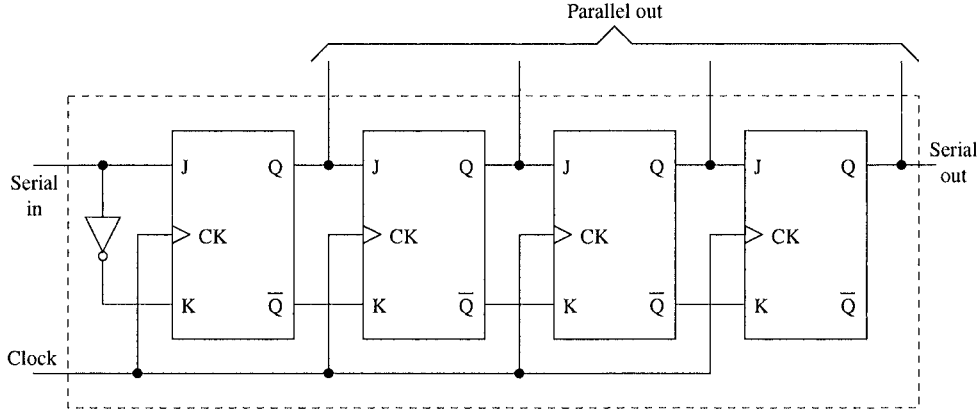

Figure 2.32 A 4-bit shift register using JK flip-flops.

In this section, we look at JK flip-flops. The truth table and logic symbol of this flip-flop is shown in Figure 2.31. Unlike the SR latch, the JK flip-flop allows all four input combinations. When JK = 11, the output toggles. This characteristic is used to build counters. Next we show couple of example sequential circuits that use the JK flip-flops.

Shift Registers

Shift registers, as the name suggests, shift data left or right with each clock pulse. Designing a shift register is relatively straightforward as shown in Figure 2.32. This shift register, built with positive edge-triggered JK flip-flops, shifts data to the right. For the first JK flip-flop, we need an inverter so that the K input is the complement of the data coming in ("Serial in" input). The data out, taken from the Q output of the rightmost JK flip-flop, is a copy of the input serial signal except that this signal is delayed by four clock periods. This is one of the uses of the shift registers.

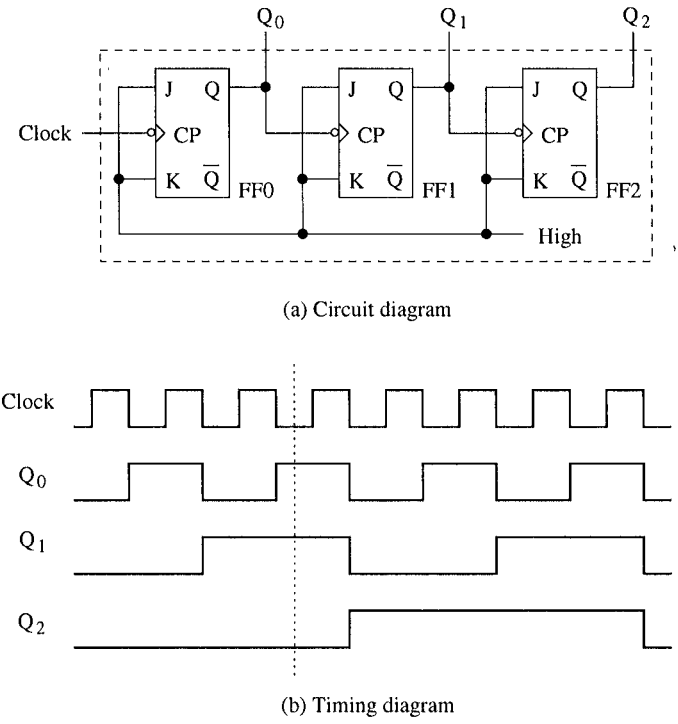

Figure 2.33 A binary ripple counter implementation using negative edge-triggered JK flip-flops.

We can also use a shift register for serial-to-parallel conversion. For example, a serial signal, given as input to the shift register in Figure 2.32, produces a parallel 4-bit output (taken from the four Q outputs of the JK flip-flops) as shown in Figure 2.32. Even though we have not shown it here, we can design a shift register that accepts input in parallel (i.e., parallel load) as well as serial form. Shift registers are also useful in implementing logical bit shift operations in the ALU of a processor.

Counters

A counter is another example of a sequential circuit that is often used in digital circuits. To see how we can build a counter, let us consider the simplest of all counters: the binary counter. A binary counter with B bits can count from 0 to $2^B - 1$. For example, a 3-bit binary counter can count from 0 to 7. After counting eight (with a count value of 7), the count value wraps around to zero. Such a counter is called a modulo-8 counter.

We know that a modulo-8 counter requires 3 bits to represent the count value. In general, a modulo-2^B counter requires B bits (i.e., $\log_2 2^B$ bits). To develop our intuition, it is helpful to look at the values 0 through 7, written in the binary form in that sequence. If you look at the rightmost bit, you will notice that it changes with every count. The middle bit changes whenever the rightmost bit changes from 1 to 0. The leftmost bit changes whenever the middle bit changes

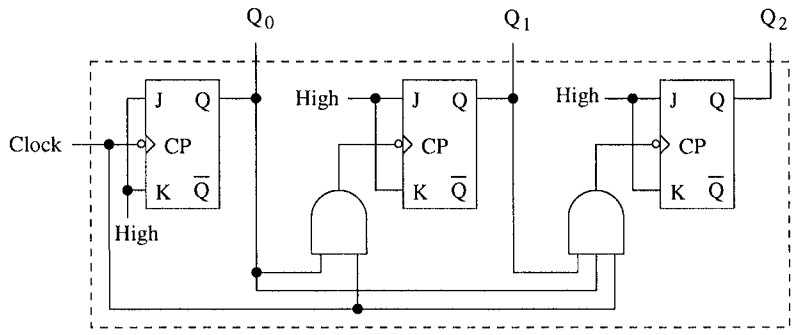

Figure 2.34 A synchronous modulo-8 counter.

from 1 to 0. These observations can be generalized to counters that use more bits. There is a simple rule that governs the counter behavior: a bit changes (flips) its value whenever its immediately preceding right bit goes from 1 to 0. This observation gives the necessary clue to design our counter. Suppose we have a negative edge-triggered JK flip-flop. We know that this flip-flop changes its output with every negative edge on the clock input, provided we hold both J and K inputs high. Well, that is the final design of our 3-bit counter as shown in Figure 2.33.

We operate the JK flip-flops in the "toggle" mode with JK = 11. The Q output of one flip-flop is connected as the clock input of the next flip-flop. The input clock, which drives our counter, is applied to FF0. When we write the counter output as $Q_2Q_1Q_0$, the count value represents the number of negative edges in the clock signal. For example, the dotted line in Figure 2.33b represents $Q_2Q_1Q_0 = 011$. This value matches the number of falling edges to the left of the dotted line in the input clock.

Counters are also useful in generating clocks with different frequencies by dividing the input clock. For example, the frequency of the clock signal at Q_0 output is half of the input clock. Similarly, frequencies of the signals at Q_1 and Q_2 are one-fourth and one-eighth of the counter input clock frequency.

The counter design shown in Figure 2.33 is called a *ripple counter* as the count bits ripple from the rightmost to the leftmost bit (i.e., in our example, from FF0 to FF2). A major problem with ripple counters is that they take a long time to propagate the count value. We have had a similar discussion about ripple carry adders on page 28.

How can we speed up the operation of the ripple binary counters? We apply the same trick that we used to derive the carry lookahead adder on page 28. We can design a counter in which all output bits change more or less at the same time. These are called *synchronous counters*. We can obtain a synchronous counter by manipulating the clock input to each flip-flop. We observe from the timing diagram in Figure 2.33b that a clock input should be applied to a flip-flop if all the previous bits are 1. For example, a clock input should be applied to FF1 whenever the output of FF0 is 1. Similarly, a clock input for FF2 should be applied when the outputs of FF0 and FF1 are both 1. A synchronous counter based on this observation is shown in Figure 2.34.

Sequential circuit design is relatively more complex than designing a combinational circuit. A detailed discussion of this topic is outside the scope of this book. If you are interested in this topic, you can refer to *Fundamentals of Computer Organization and Design* by Dandamudi for more details.

Summary

A computer system consists of three main components: processor, memory, and I/O. These three components are glued together by a system bus. The system bus consists of three buses: data bus, address bus, and control bus. The address bus is used to carry the address information. The width of this bus determines the memory address space of the processor. The data bus is used for transferring data between these components (e.g., from memory to processor). The data bus width determines the size of the data moved in one transfer cycle. The control bus provides several control signals to facilitate a variety of activities on the system bus. These activities include memory read, I/O write, and so on.

The remainder of the chapter looked at the digital logic circuits in detail. We introduced several simple logic gates such as AND, OR, NOT gates as well as NAND, NOR, and XOR gates. Although the first three gates are considered as the basic gates, we often find that the other three gates are useful in practice.

We described three ways of representing logical functions: truth table, logical expression, and graphical form. The truth table method is cumbersome for logical expressions with more than a few variables. Logical expression representation is useful to derive simplified expressions by applying Boolean identities. The graphical form is useful to implement logical circuits.

Logical expressions can be written in one of two basic forms: sum-of-products or product-of-sums. From either of these expressions, it is straightforward to obtain logic circuit implementations. However, such circuits are not the best designs as simplifying logical expressions can minimize the component count. Several methods are available to simplify logical expressions. We have discussed two of them: the algebraic and Karnaugh map methods.

Combinational circuits provide a higher level of abstraction than the basic logic gates. Higher-level logical functionality provided by these circuits helps in the design of complex digital circuits. We have discussed several commonly used combinational circuits including multiplexers, demultiplexers, decoders, comparators, adders, and ALUs.

We also presented details about two types of programmable logic devices: PLAs and PALs. These devices can also be used to implement any logical function. Both these devices use internal fuses that can be selectively blown to implement a given logical function. PALs reduce the complexity of the device by using fewer fuses than PLAs. As a result, most commercial implementations of programmable logic devices are PALs.

Our discussion of ALU design suggests that complex digital circuit design can be simplified by using the higher level of abstraction provided by the combinational circuits.

In combinational circuits, the output depends only on the current inputs. In contrast, output of a sequential circuit depends both on the current inputs as well as the past history. In other words, sequential circuits are state-dependent whereas the combinational circuits are stateless.

Design of a sequential circuit is relatively more complex than designing a combinational circuit. In sequential circuits, we need a notion of time. We introduced the clock signal to provide this timing information. Clocks also facilitate synchronization of actions in a large, complex digital system that has both combinational and sequential circuits.

We discussed two basic types of circuits: latches and flip-flops. The key difference between these two devices is that latches are level sensitive whereas flip-flops are edge-triggered. These devices can be used to store a single bit of data. Thus, they provide the basic capability to design memories. We discuss memory design in the next chapter.

We presented some example sequential circuits—shift registers and counters—that are commonly used in digital circuits. There are several other sequential circuit building blocks that are commercially available.

3

Memory Organization

In the last chapter, we have seen how flip-flops and latches can be used to store a bit. This chapter builds on this foundation and explains how we can use these basic devices and build larger memory blocks and modules. We start off with an overview of memory operations and the types of memory. The following section discusses how larger memories can be built using memory chips. The design process is fairly intuitive. The basic technique involves using a two-dimensional array of memory chips. A characteristic of these designs is the use of chip select. Chip select input can be used to select or deselect a chip or a memory module. Chip select allows us to connect multiple devices to the system bus. Appropriate chip select signal generation facilitates communication among the entities connected to the system bus.

Chip select logic is also useful in mapping memory modules to memory address space. We present details about two ways of mapping a memory module to the address space. Before ending the chapter, we describe how multibyte data are stored in memory and explain the reasons why data alignment leads to improved application performance. We end the chapter with a summary.

Introduction

The memory of a computer system consists of tiny electronic switches, with each switch set in one of two states: *open* or *closed*. It is, however, more convenient to think of these states as 0 and 1 rather than open and closed. A single such switch can be used to represent two (i.e., binary) numbers: a zero and a one. Thus, each switch can represent a *binary digit* or *bit*, as it is known. The memory unit consists of millions of such bits. In order to make memory more manageable, bits are organized into groups of eight bits called *bytes*. Memory can then be viewed as consisting of an ordered sequence of bytes. Each byte in this memory can be identified by its sequence number starting with 0, as shown in Figure 3.1. This is referred to as the *memory address* of the byte. Such memory is called *byte addressable* memory.

The amount of memory that a processor can address depends on the address bus width. Typically, 32-bit processors support 32-bit addresses. Thus, these processors can address up to 4 GB (2^{32} bytes) of main memory as shown in Figure 3.1. This number is referred to as the *memory address space*. The actual memory in a system, however, is always less than or equal to the memory address space. The amount of memory in a system is determined by how much of this memory address space is *populated* with memory chips.

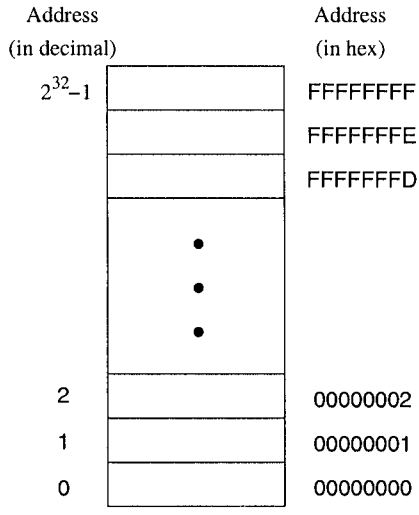

Figure 3.1 Logical view of the system memory.

This chapter gives details about memory organization. In the next section we give details about the two basic memory operations—read and write. Memory can be broadly divided into read-only and read/write types. Details about the types of memory are given next. After giving these details, we look at the memory design issues. Towards the end of the chapter, we describe two ways of storing multibyte data and the reasons why data alignment results in improved performance.

Basic Memory Operations

The memory unit supports two fundamental operations: *read* and *write*. The *read operation* reads a previously stored data and the *write operation* stores a value in memory. Both of these operations require an address in memory from which to read a value or to which to write a value. In addition, the write operation requires specification of the data to be written. The block diagram of the memory unit is shown in Figure 3.2. The address and data of the memory unit are connected to the address and data buses of the system bus, respectively. The read and write signals come from the control bus.

Two metrics are used to characterize memory. *Access time* refers to the amount of time required by the memory to retrieve the data at the addressed location. The other metric is the *memory cycle time*, which refers to the minimum time between successive memory operations. Memory transfer rates can be measured by the bandwidth metric, which specifies the number of bytes transferred per second.

The read operation is nondestructive in the sense that one can read a location of the memory as many times as one wishes without destroying the contents of that location. The write operation, on the other hand, is destructive, as writing a value into a location destroys the old contents of that memory location.

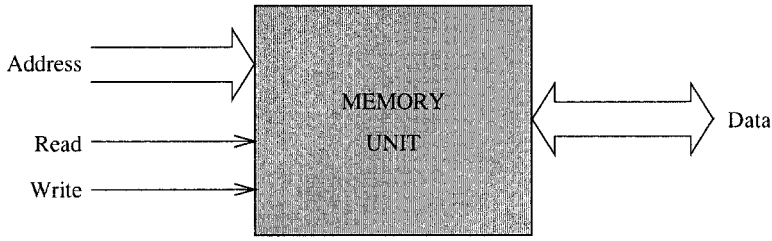

Figure 3.2 Block diagram of the system memory.

Steps in a typical read cycle

1. Place the address of the location to be read on the address bus;
2. Activate the memory read control signal on the control bus;
3. Wait for the memory to retrieve the data from the addressed memory location and place it on the data bus;
4. Read the data from the data bus;
5. Drop the memory read control signal to terminate the read cycle.

For example, a simple Pentium read cycle takes three clock cycles. During the first clock cycle, steps 1 and 2 are performed. The processor waits until the end of the second clock and reads the data and drops the read control signal. If the memory is slower (and therefore cannot supply data within the specified time), the memory unit indicates its inability to the processor and the processor waits longer for the memory to supply data by inserting *wait cycles*. Note that each wait cycle introduces a waiting period equal to one system clock period and thus slows down the system operation.

Steps in a typical write cycle

1. Place the address of the location to be written on the address bus;
2. Place the data to be written on the data bus;
3. Activate the memory write control signal on the control bus;
4. Wait for the memory to store the data at the addressed location;
5. Drop the memory write signal to terminate the write cycle.

As with the read cycle, Pentium requires three clock cycles to perform a simple write operation. During the first clock cycle, steps 1 and 3 are done. Step 2 is performed during the second clock cycle. The processor gives memory time until the end of the second clock and drops the memory write signal. If the memory cannot write data at the maximum processor rate, wait cycles can be introduced to extend the write cycle.

Types of Memory

The memory unit can be implemented using a variety of memory chips—different speeds, different manufacturing technologies, and different sizes. The two basic types of memory are the *read-only memory* and *read/write memory*.

A basic property of memory systems is, they are random access memories in that accessing any memory location (for reading or writing) takes the same time. Contrast this with data stored on a magnetic tape. Access time on the tape depends on the location of the data.

Volatility is another important property of a memory system. A *volatile* memory requires power to retain its contents. A *nonvolatile* memory can retain its values even in the absence of power.

Read-Only Memories Read-only memory (ROM) allows only read operations to be performed. As the name suggests, we cannot write into this memory. The main advantage of ROM is that it is nonvolatile. Most ROM is factory programmed and cannot be altered. The term *programming* in this context refers to writing values into a ROM. This type of ROM is cheaper to manufacture in large quantities than other types of ROM. The program that controls the standard input and output functions (called BIOS), for instance, is kept in ROM. Current systems use the flash memory rather than a ROM (see our discussion later).

Other types include *programmable ROM* (PROM) and *erasable PROM* (EPROM). PROM is useful in situations where the contents of ROM are not yet fixed. For instance, when the program is still in the development stage, it is convenient for the designer to be able to program the ROM locally rather than at the time of manufacture.

In PROM, a fuse is associated with each bit cell. If the fuse is on, the bit cell supplies a 1 when read. The fuse has to be burned to read a 0 from that bit cell. When PROM is manufactured, its contents are all set to 1. To program a PROM, selective fuses are burned (to introduce 0s) by sending high current. This is the writing process and is not reversible (i.e., a burned fuse cannot be restored). EPROM offers further flexibility during system prototyping. Contents of EPROM can be erased by exposing them to ultraviolet light for a few minutes. Once erased, EPROM can be reprogrammed again.

Electrically erasable PROMs (EEPROMs) allow further flexibility. By exposing to ultraviolet light, we erase *all* the contents of an EPROM. EEPROMs, on the other hand, allow the user to selectively erase contents. Furthermore, erasing can be done in place; there is no need to place it in a special ultraviolet chamber.

Flash memory is a special kind of EEPROM. One main difference between the EEPROM and flash memory lies in how the memory contents are erased. The EEPROM is byte-erasable whereas the flash memory is block-erasable. Thus, writing in the flash memory involves erasing a block and rewriting it.

Current systems use the flash memory for BIOS so that changing BIOS versions is fairly straightforward (You just have to "flash" the new version). Flash memory is also becoming very popular as a removable media. The SmartMedia, CompactFlash, Sony's Memory Stick are all examples of various forms of removable flash media.

Flash memory, however, is slower than the RAMs we discuss next. For example, flash memory cycle time is about 80 ns whereas the corresponding value for RAMs is about 10 ns. Nevertheless, since flash memories are nonvolatile, they are used in applications where this property is important. Apart from BIOS, we see them in devices like digital cameras and video game systems.

Read/Write Memory Read/write memory is commonly referred to as *random access memory* (RAM), even though ROM is also a random access memory. This terminology is so entrenched in the literature that we follow it here with a cautionary note that RAM actually refers to RWM.

Read/write memory can be divided into *static* and *dynamic* categories. Static random access memory (SRAM) retains the data, once written, without further manipulation so long as the source of power holds its value. SRAM is typically used for implementing the processor registers and cache memories.

The bulk of main memory in a typical computer system, however, consists of dynamic random access memory (DRAM). DRAM is a complex memory device that uses a tiny capacitor to store a bit. A charged capacitor represents 1 bit. Since capacitors slowly lose their charge due to leakage, they must be periodically *refreshed* to replace the charges representing 1 bit. A typical refresh period is about 64 ms. Reading from DRAM involves testing to see if the corresponding bit cells are charged. Unfortunately, this test destroys the charges on the bit cells. Thus, DRAM is a destructive read memory.

For proper operation, a read cycle is followed by a restore cycle. As a result, the DRAM cycle time, the actual time necessary between accesses, is typically about twice the read access time, which is the time necessary to retrieve a datum from the memory.

Several types of DRAM chips are available. We briefly describe some of most popular types DRAMs next.

FPM DRAMs Fast page mode (FPM) DRAMs are an improvement over the previous generation DRAMs. FPM DRAMs exploit the fact that we access memory sequentially, most of the time. To know how this access pattern characteristic is exploited, we have to look at how the memory is organized. Internally, the memory is organized as a matrix of bits. For example, a 32 Mb memory could be organized as 8 K rows (i.e., 8192 since K = 1024) and 4 K columns. To access a bit, we have to supply a row address and a column address. In the FPM DRAM, a page represents part of the memory with the same row address. To access a page, we specify the row address only once; we can read the bits in the specified page by changing the column addresses. Since the row address is not changing, we save on the memory cycle time.

EDO DRAMs Extended Data Output (EDO) DRAM is another type of FPM DRAM. It also exploits the fact that we access memory sequentially. However, it uses pipelining to speed up memory access. That is, it initiates the next request before the previous memory access is completed. A characteristic of pipelining inherited by EDO DRAMs is that single memory reference requests are not speeded up. However, by overlapping multiple memory access requests, it improves the memory bandwidth.

SDRAMs Both FPM DRAMs and EDO DRAMs are asynchronous in the sense that their data output is not synchronized to a clock. The synchronous DRAM (SDRAM) uses an external clock to synchronize the data output. This synchronization reduces delays and thereby improves the memory performance. The SDRAM memories are used in systems that require memory satisfying the PC100/PC133 specification. SDRAMs are dominant in low-end PC market and are cheap.

DDR SDRAMs The SDRAM memories are also called single data rate (SDR) SDRAMs as they supply data once per memory cycle. However, with increasing processor speeds, the processor bus (also called front-side bus or FSB) frequency is also going up. For example, PCs now have a 533 MHz FSB that supports a transfer rate of about 4.2 GB/s. To satisfy this transfer rate, SDRAMs have been improved to provide data at both rising and falling edges of the clock. This effectively doubles the memory bandwidth and satisfies the high data transfer rates of faster processors.

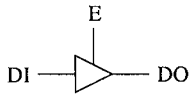

(a)

(b) E = 0

(c) E = 1

Inputs		Output
E	DI	DO
1	0	0
1	1	1
0	X	Z

(d)

Figure 3.3 Tristate buffer: (a) logic symbol; (b) it acts as an open circuit when the enable input is inactive (E = 0); (c) it acts as a closed circuit when the enable input is active (E = 1); (d) truth table (X = don't care input, and Z = high impedance state).

RDRAMs Rambus DRAM (RDRAM) takes a completely different approach to increase the memory bandwidth. A technology developed and licensed by Rambus, it is a memory subsystem that consists of the RAM, RAM controller, and a high-speed bus called the Rambus channel. Like the DDR DRAM, it also performs two transfers per cycle. In contrast to the 8-byte wide data bus of DRAMs, Rambus channel is a 2-byte data bus. However, by using multiple channels, we can increase the bandwidth of RDRAMs. For example, a dual-channel RDRAM operating at 533 MHz provides a bandwidth of 533 $*$ 2 $*$ 4 = 4.2 GB/s, sufficient for the 533 MHz FSB systems.

From this brief discussion it should be clear that DDR SDRAMs and RDRAMs compete with each other in the high-end market. The race between these two DRAM technologies continues as Intel boosts its FSB to 800 MHz.

Building a Memory Block

In the last chapter, we discussed several basic building blocks such as flip-flops, multiplexers, and decoders. For example, flip-flops provide the basic capability to store a bit of data. These devices can be replicated to build larger memory units. For example, we can place 16 flip-flops together in a row to store a 16-bit word. All the 16 flip-flops would have their clock inputs tied together to form a single common clock to write a 16-bit word. We can place several such rows in a memory chip to store multiple words of data. In this organization, each row supplies a word. To build even larger memories, we can use multiple chips such that all their data lines are connected to the data bus. This implies that we need to find a way to connect these outputs together. Tristate buffers are used for this purpose.

Tristate Buffers

The logic circuits we have discussed in the last chapter have two possible states: 0 or 1. The devices we discuss here are called tristate buffers as they can be in three states: 0, 1, or Z state. A tristate buffer output can be in state 0 or 1 just as with a normal logic gate. In addition, the output can also be in a high impedance (Z) state, in which the output floats. Thus, even though the output is physically connected to the bus, it behaves as though it is electrically and logically disconnected from the bus.

Tristate buffers use a separate control signal to float the output independent of the data input (see Figure 3.3a). This particular feature makes them suitable for bus connections. Figure 3.3a

shows the logic symbol for a tristate buffer. When the enable input (E) is low, the buffer acts as an open circuit (i.e., output is in the high impedance state Z) as shown in Figure 3.3b; otherwise, it acts as a short circuit (Figure 3.3c). The enable input must be high in order to pass the input data to output, as shown in the truth table (see Figure 3.3d).

Memory Design with D Flip-Flops

We begin our discussion with how one can build memories using the D flip-flops. Recall that we use flip-flops for edge-triggered devices and latches for level-sensitive devices. The principle of constructing memory out of D flip-flops is simple. We use a two-dimensional array of D flip-flops, with each row storing a word. The number of rows is equal to the number of words the memory should store. Thus, this organization uses "horizontal" expansion to increase the word width and "vertical" expansion to increase the number of words.

In general, the number of columns and the number of rows is a power of two. We use the notation M $\times$ N memory to represent a memory that can store M words, where each word is N-bits long.

Figure 3.4 shows a 4 $\times$ 3 memory built with 12 D flip-flops organized as a 4 $\times$ 3 array. Since all flip-flops in a row store a word of data, each row of flip-flops has their clock signals tied together to form a single clock signal for each row. All flip-flops in a column receive input from the same input data line. For example, the rightmost column D inputs are connected to the input data D0.

This memory requires two address lines to select one of the four words. The two address lines are decoded to select a specific row by using a 2-to-4 decoder. The low-active write signal ($\overline{WR}$) is gated through an AND gate as shown in Figure 3.4. Depending on the address, only one of the four decoder output lines will be high, permitting the $\overline{WR}$ signal to clock the selected row to write the 3-bit data present on D0 to D2 lines. Note that the decoder along with the four AND gates forms a demultiplexer that routes the $\overline{WR}$ signal to the row selected by the address lines A1 and A0.

The design we have done so far allows us to write a 3-bit datum into the selected row. To complete the design, we have to find a way to read data from this memory. As each bit of data is supplied by one of the four D flip-flops in a column, we have to find a way to connect these four outputs to a single data out line. A natural choice for the job is a 4-to-1 multiplexer. The MUX selection inputs are connected to the address lines to allow appropriate data on the output lines D0 through D2. The final design is shown in Figure 3.4.

We need to pass the outputs of the multiplexers through tristate buffers as shown in Figure 3.4. The enable input signal for these output tristate buffers is generated by ANDing the chip select and read signals. Two inverters are used to provide low-active chip select ($\overline{CS}$) and memory read ($\overline{RD}$) inputs to the memory block.

With the use of the tristate buffers, we can tie the corresponding data in and out signal lines together to satisfy the data bus connection requirements. Furthermore, we can completely disconnect the outputs of this memory block by making $\overline{CS}$ high.

We can represent our design using the logic symbol shown in Figure 3.5. Our design uses separate read and write signals. These two signals are part of the control bus (see Figure 2.1). It is also possible to have a single line to serve as a read and write line. For example, a 0 on this line can be interpreted as write and a 1 as read. Such signals are represented as the $\overline{WR}$/RD line, indicating low-active write and high-active read.

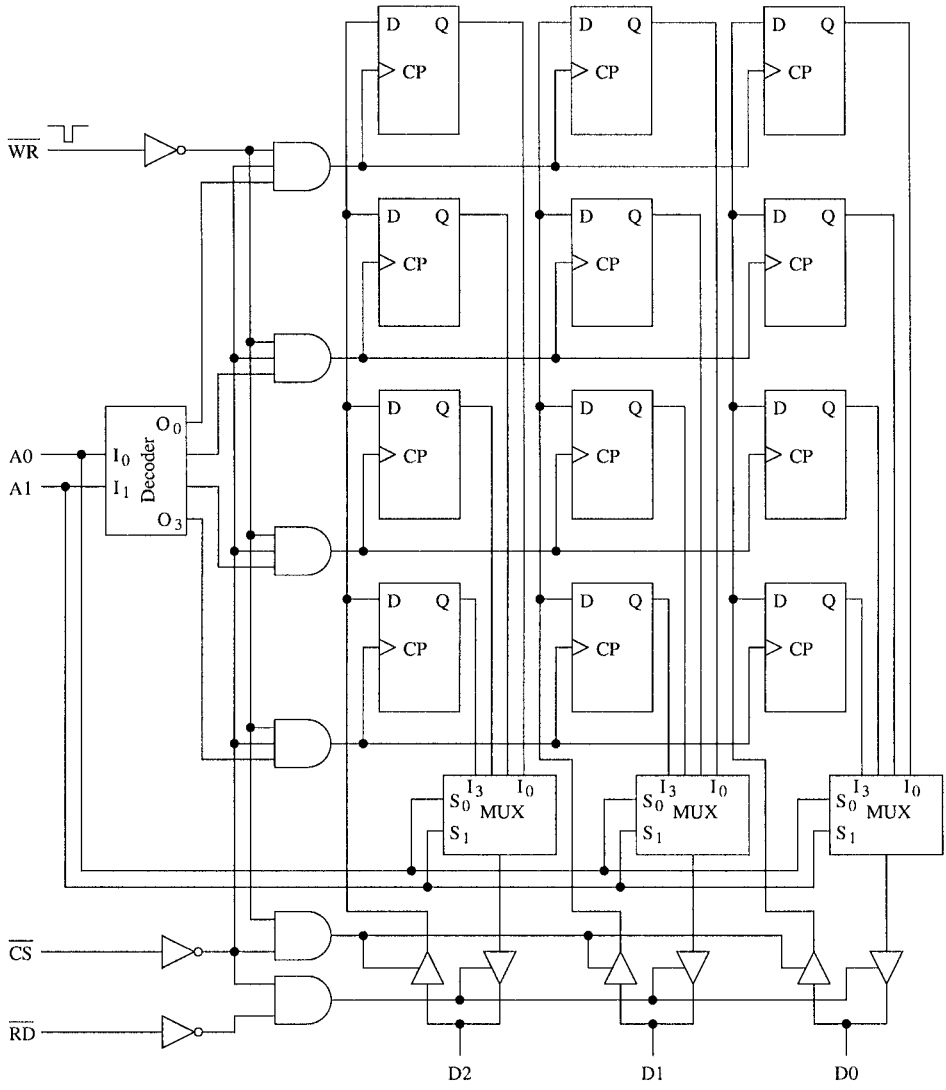

Figure 3.4 A 4 × 3 memory design using D flip-flops.

Building Larger Memories

Now that we know how to build memory blocks using devices that can store a single bit, we move on to building larger memory units using these memory blocks. We explain the design process by using an example. Before discussing the design procedure, we briefly present details about commercially available memory chips.

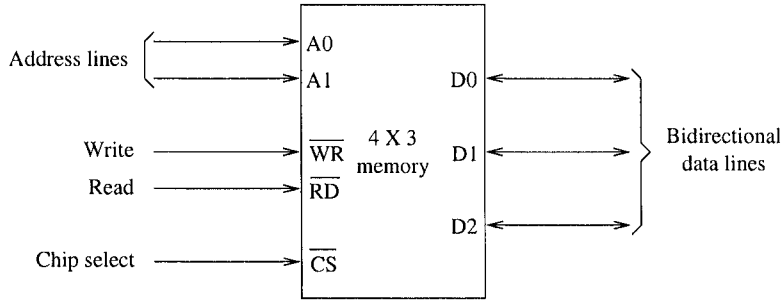

Figure 3.5 Block diagram representation of a 4 × 3 memory.

Memory Chips

Several commercial memory chips are available to build larger memories. Here we look at two example chips—a SRAM and a DRAM—from Micron Technology.

The SRAM we discuss is an 8-Mb chip that comes in three configurations: 512 K × 18, 256 K × 32, or 256 K × 36. Note that, in the first and last configurations, word length is not a multiple of 8. These additional bits are useful for error detection/correction. These chips have an access time of 3.5 ns. The 512 K × 18 chip requires 19 address lines, whereas the 256 K × 32/36 versions require 18 address lines.

An example DRAM (it is a synchronous DRAM) is the 256-Mb capacity chip that comes in word lengths of 4, 8, or 16 bits. That is, this memory chip comes in three configurations: 64 M × 4, 32 M × 8, or 16 M × 16. The cycle time for this chip is about 7 ns.

In the days when the data bus widths were small (8 or 16), DRAM chips were available in 1-bit widths. Current chips use a word width of more than 1 as it becomes impractical to string 64 1-bit chips to get 64-bit word memories for processors such as the Pentium.

From the details of these two example memory chips, we see that the bit capacity of a memory chip can be organized into several configurations. If we focus on the DRAM chip, for example, what are the pros and cons of the various configurations? The advantage of wider memory chips (i.e., chips with larger word size) is that we require fewer of them to build a larger memory. As an example, consider building memory for your Pentium-based PC. Even though the Pentium is a 32-bit processor, it uses a 64-bit wide data bus. Suppose that you want to build a 16 M × 64 memory. We can build this memory by using four 16 M × 16 chips, all in a single row. How do we build such a memory using, for example, the 32 M × 8 version of the chip? Because our word size is 64, we have to use 8 such chips in order to provide 64-bit wide data. That means we get 32 M × 64 memory as the minimum instead of the required 16 M × 64. The problem becomes even more serious if we were to use the 64 M × 4 version chip. We have to use 16 such chips, and we end up with a 64 M × 64 memory. This example illustrates the tradeoff between using "wider" memories versus "deeper" memories.

Larger Memory Design

Before proceeding with the design of a memory unit, we need to know if the memory address space (MAS) supported by the processor is byte addressable or not. In a byte-addressable space, each address identifies a byte. All popular processors—the Pentium, PowerPC, SPARC, and MIPS—

support byte-addressable space. Therefore, in our design examples, we assume byte-addressable space.

We now discuss how one can use memory chips, such as the ones discussed before, to build system memory. The procedure is similar to the intuitive steps followed in the previous design example.

First we have to decide on the configuration of the memory chip, assuming that we are using the DRAM chip described before. As described in the last section, independent of the configuration, the total bit capacity of a chip remains the same. That means the number of chips required remains the same. For example, if we want to build a 64 M $\times$ 32 memory, we need eight chips. We can use eight 64 M $\times$ 4 in a single row, eight 32 M $\times$ 8 in 2 $\times$ 4 array, or 16 M $\times$ 16 in 4 $\times$ 2 array. Although we have several alternatives for this example, there may be situations where the choice is limited. For example, if we are designing a 16 M $\times$ 32 memory, we have no choice but to use the 16 M $\times$ 16 chips.

Once we have decided on the memory chip configuration, it is straightforward to determine the number of chips and the organization of the memory unit. Let us assume that we are using D $\times$ W chips to build an M $\times$ N memory. Of course, we want to make sure that D $\leq$ M and W $\leq$ N.

$$\text{Number of chips required} = \frac{M \times N}{D \times W},$$

$$\text{Number of rows} = \frac{M}{D},$$

$$\text{Number of columns} = \frac{N}{W}.$$

The read and write lines of all memory chips should be connected to form a single read and write signal. These signals are connected to the control bus memory read and write lines. For simplicity, we omit these connections in our design diagrams.

Data bus connections are straightforward. Each chip in a row supplies a subset of data bits. In our design, the right chip supplies D0 to D15, and the left chip supplies the remaining 16 data bits (see Figure 3.6).

For each row, connect all chip select inputs as shown in Figure 3.6. Generating appropriate chip select signals is the crucial part of the design process. To complete the design, partition the address lines into three groups as shown in Figure 3.7.

The least significant Z address bits, where Z = $\log_2(N/8)$, are not connected to the memory unit. This is because each address going into the memory unit will select an N-bit value. Since we are using byte-addressable memory address space, we can leave the Z least significant bits that identify a byte out of N/8 bytes. In our example, N = 32, which gives us Z = 2. Therefore, the address lines A0 and A1 are not connected to the memory unit.

The next Y address bits, where Y = $\log_2$D, are connected to the address inputs of all the chips. Since we are using 16 M chips, Y = 24. Thus, address lines A2 to A25 are connected to all the chips as shown in Figure 3.6.

The remaining most significant address bits X are used to generate the chip select signals. This group of address bits plays an important role in mapping the memory to a part of the memory address space. We discuss this mapping in detail in the next section. The design shown in Figure 3.6 uses address lines A26 and A27 to generate four chip select signals, one for each row of chips. We are using a low-active 2-to-4 decoder to generate the $\overline{CS}$ signals.

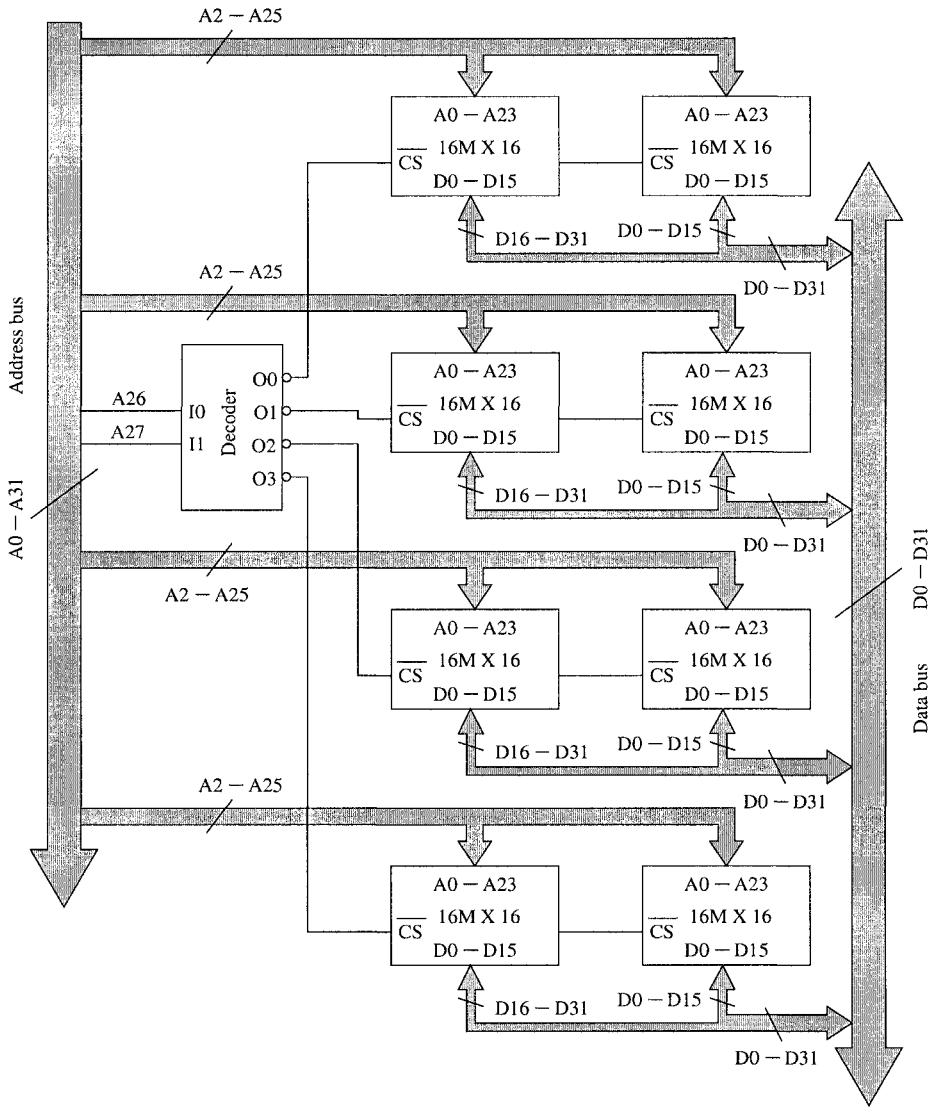

Figure 3.6 Design of a 64 M × 32 memory using 16 M × 16 memory chips.

The top row of chips in Figure 3.6 is mapped to the first 64-MB address space (i.e., from addresses 0 to $2^{26} - 1$). The second row is mapped to the next 64-MB address space, and so on. After reading the next section, you will realize that this is a partial mapping.

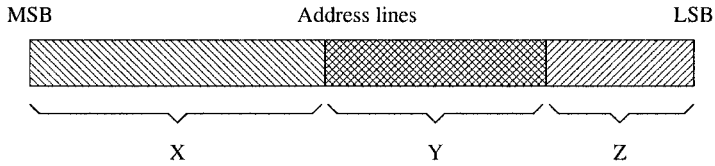

Figure 3.7 Address line partition.

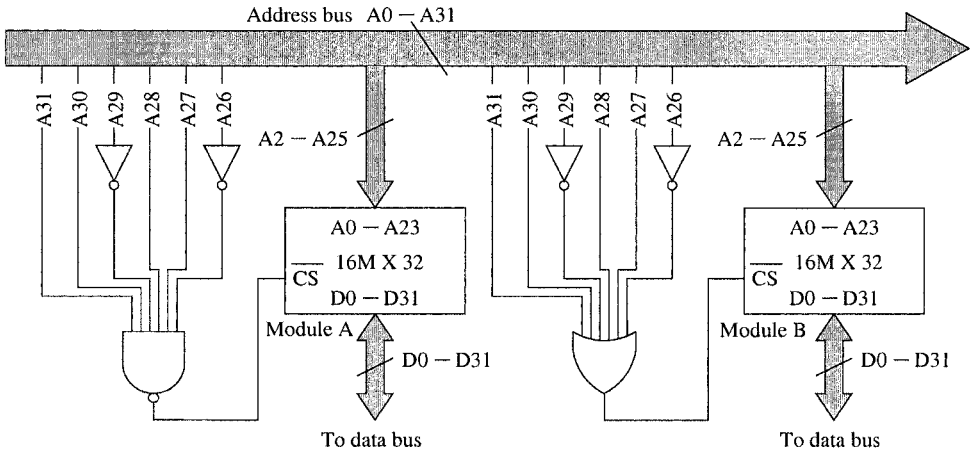

Figure 3.8 Full address mapping.

Mapping Memory

Memory mapping refers to the placement of a memory unit in the memory address space (MAS). For example, the IA-32 architecture supports 4 GB of address space (i.e., it uses 32 bits for addressing a byte in memory). If your system has 128 MB of memory, it can be mapped to one of several address subspaces. This section describes how this mapping is done.

Full Mapping

Full mapping refers to a one-to-one mapping function between the memory address and the address in MAS. This means, for each address value in MAS that has a memory location mapped, there is one and only one memory location responding to the address.

Full mapping is done by completely decoding the higher-order X bits of memory (see Figure 3.7) to generate the chip select signals. Two example mappings of 16 M × 32 memory modules are shown in Figure 3.8. Both these mappings are full mappings as all higher-order X bits participate in generating the $\overline{CS}$ signal.

Logically we can divide the 32 address lines into two groups. One group, consisting of address lines Y and Z, locates a byte in the selected 16 M × 32 memory module. The remaining higher-

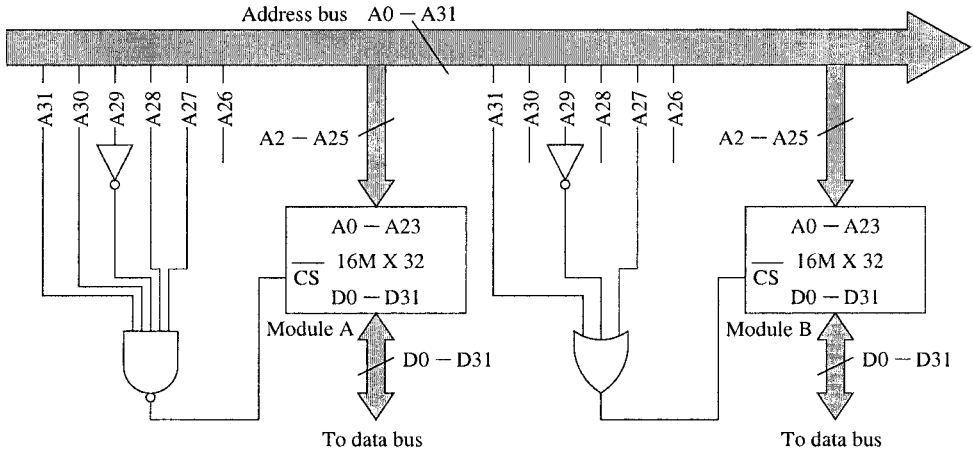

Figure 3.9 Partial address mapping.

order bits (i.e., the X group) are used to generate the $\overline{CS}$ signal. Given this delineation, it is simple to find the mapping.

We illustrate the technique by using the two examples shown in Figure 3.8. Since the memory modules have a low-active chip select input, a given module is selected if its $\overline{CS}$ input is 0. For Module A, the NAND gate output is low when A26 and A29 are low and the remaining four address lines are high. Thus, this memory module responds to memory read/write activity whenever the higher-order six address bits are 110110. From this, we can get the address locations mapped to this module as D8000000H to DBFFFFFFH. For convenience, we have expressed the addresses in the hexadecimal system (as indicated by the suffix letter H). The address D8000000H is mapped to the first location and the address DBFFFFFFH to the last location of Module A. For addresses that are outside this range, the $\overline{CS}$ input to Module A is high and, therefore, it is deselected.

For Module B, the same inputs are used except that the NAND gate is replaced by an OR gate. Thus, the output of this OR gate is low when the higher-order six address bits are 001001. From this, we can see that mapping for Module B is 24000000H to 27FFFFFFH. As these two ranges are mutually exclusive, we can keep both mappings without causing conflict problems.

Partial Mapping

Full mapping is useful in mapping a memory module; however, often the complexity associated with generating the $\overline{CS}$ signal is not necessary. For example, we needed a 6-input NAND or OR gate to map the two memory modules in Figure 3.8. Partial mapping reduces this complexity by mapping each memory location to more than one address in MAS. We can obtain simplified $\overline{CS}$ logic if the number of addresses a location is mapped to is a power of 2.

Let us look at the mapping of Module A in Figure 3.9 to clarify some of these points. The $\overline{CS}$ logic is the same except that we are not connecting the A26 address line to the NAND gate. Because A26 is not participating in generating the signal, it becomes a don't care input. In this mapping, Module A is selected when the higher-order six address bits are 110110 or 110111. Thus, Module A is mapped to the address space D8000000H to DBFFFFFFH and DC000000H

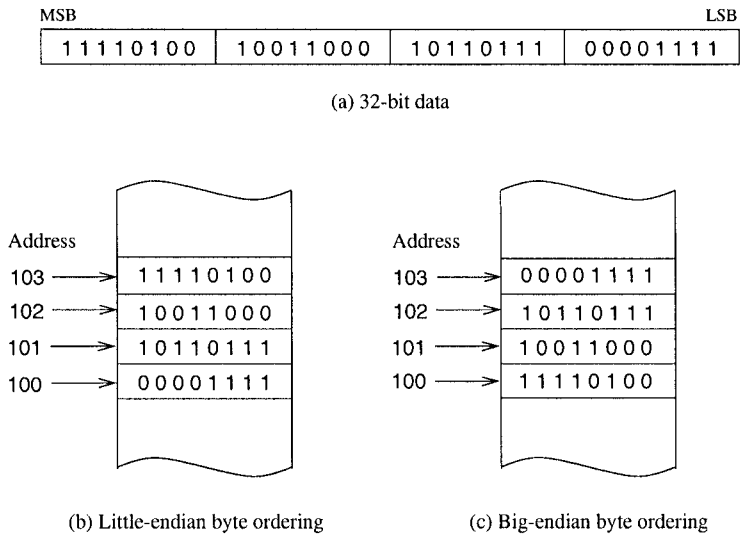

Figure 3.10 Two byte ordering schemes.

to DFFFFFFFH. That is, the first location in Module A responds to addresses D8000000H and DC000000H. Since we have left out one address bit A26, two (i.e., 2^1) addresses are mapped to a memory location. In general, if we leave out k address bits from the chip select logic, we map 2^k addresses to each memory location. For example, in our memory design of Figure 3.6, four address lines (A28 to A31) are not used. Thus, $2^4 = 16$ addresses are mapped to each memory location.

We leave it as an exercise to verify that each location in Module B is mapped to eight addresses as there are three address lines that are not used to generate the $\overline{CS}$ signal.

Storing Multibyte Data

Storing data often requires more than a byte. For example, we need four bytes of memory to store an integer variable that can take a value between 0 and $2^{32} - 1$. Let us assume that the value to be stored is the one shown in Figure 3.10a.

Suppose that we want to store these 4-byte data in memory at locations 100 through 103. How do we store them? Figure 3.10 shows two possibilities: least significant byte (Figure 3.10b) or most significant byte (Figure 3.10c) is stored at location 100. These two byte ordering schemes are referred to as the *little endian* and *big endian*. In either case, we always refer to such multibyte data by specifying the lowest memory address (100 in this example).

Is one byte ordering scheme better than the other? Not really! It is largely a matter of choice for the designers. For example, the IA-32 processors use the little-endian byte ordering. However, most processors leave it up to the system designer to configure the processor. For example, the MIPS and PowerPC processors use the big-endian byte ordering by default, but these processors can be configured to use the little-endian scheme.

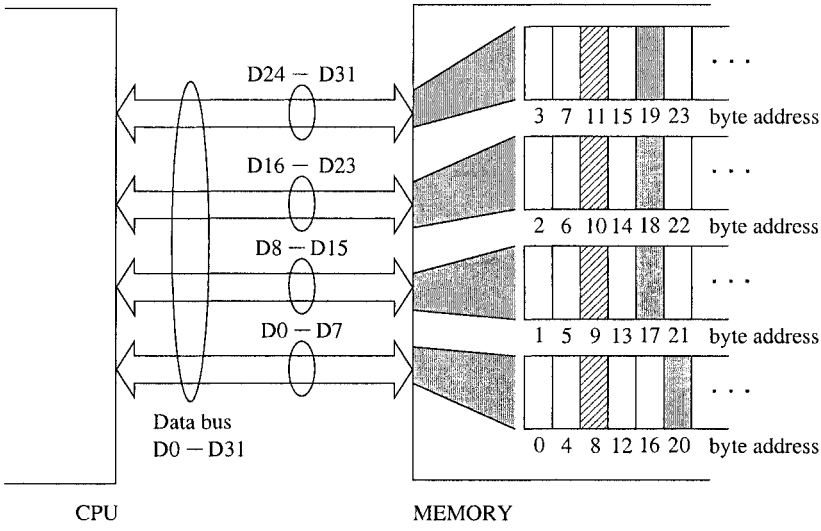

Figure 3.11 Byte-addressable memory interface to the 32-bit data bus.

The particular byte-ordering scheme used does not pose any problems as long as you are working with machines that use the same byte-ordering scheme. However, difficulties arise when you want to transfer data between two machines that use different schemes. In this case, conversion from one scheme to the other is required. For example, the IA-32 instruction set provides two instructions to facilitate such conversion: one to perform 16-bit data conversions and the other for 32-bit data. Later chapters give details on these instructions.

Alignment of Data

We can use our memory example to understand why data alignment improves the performance of applications. Suppose we want to read 32-bit data from the memory shown in Figure 3.6. If the address of these 32-bit data is a multiple of four (i.e., address lines A0 and A1 are 0), the 32-bit data are stored in a single row of memory. Thus the processor can get the 32-bit data in one read cycle. If this condition is not satisfied, then the 32-bit data item is spread over two rows. Thus the processor needs to read two 32-bits of data and extract the required 32-bit data. This scenario is clearly demonstrated in Figure 3.11.

In Figure 3.11, the 32-bit data item stored at address 8 (shown by hashed lines) is aligned. Due to this alignment, the processor can read this data item in one read cycle. On the other hand, the data item stored at address 17 (shown shaded) is unaligned. Reading this data item requires two read cycles: one to read the 32 bits at address 16 and the other to read the 32 bits at address 20. The processor can internally assemble the required 32-bit data item from the 64-bit data read from the memory.

You can easily extend this discussion to the Pentium's 64-bit data bus. It should be clear to you that aligned data improve system performance.

- *2-Byte Data*: A 16-bit data item is aligned if it is stored at an even address (i.e., addresses that are multiples of two). This means that the least significant bit of the address must be 0.
- *4-Byte Data*: A 32-bit data item is aligned if it is stored at an address that is a multiple of four. This implies that the least significant two bits of the address must be 0 as discussed in the last example.
- *8-Byte Data*: A 64-bit data item is aligned if it is stored at an address that is a multiple of eight. This means that the least significant three bits of the address must be 0. This alignment is important for Pentium processors, as they have a 64-bit wide data bus. On 80486 processors, since their data bus is 32-bits wide, a 64-bit data item is read in two bus cycles and alignment at 4-byte boundaries is sufficient.

The IA-32 processors allow both aligned and unaligned data items. Of course, unaligned data cause performance degradation. Alignment constraints of this type are referred to as *soft alignment* constraints. Because of the performance penalty associated with unaligned data, some processors do not allow unaligned data. This alignment constraint is referred to as the *hard alignment* constraint.

Summary

We have discussed the basic memory design issues. We have shown how flip-flops can be used to build memory blocks. Interfacing a memory unit to the system bus typically requires tristate buffers. We have described by means of an example how tristate buffers are useful in connecting the memory outputs to the data bus.

Building larger memories requires both horizontal and vertical expansion. Horizontal expansion is used to expand the word size, and vertical expansion provides an increased number of words. We have shown how one can design memory modules using standard memory chips. In all these designs, chip select plays an important role in allowing multiple entities to be attached to the system bus.

Chip select logic also plays an important role in mapping memory modules into the address space. Two basic mapping functions are used: full mapping and partial mapping. Full mapping provides a one-to-one mapping between memory locations and addresses. In partial mapping, each memory location is mapped to a number of addresses equal to a power of 2. The main advantage of partial mapping is that it simplifies the chip select logic.

We have described the big-endian or little-endian formats to store multibyte data. We have also discussed the importance of data alignment. Unaligned data can lead to performance degradation. We have discussed the reasons for improvement in performance due to alignment of data.

4

The IA-32 Architecture

When you are programming in a high-level language like C, you don't have to know anything about the underlying processor and the system. However, when programming in an assembly language, you should have some understanding of how the processor is organized and the system is put together. This chapter provides these details for the Intel IA-32 architecture. The Pentium processor is an implementation of this architecture. Of course, several other processors such as Celeron, Pentium 4, and Xeon also belong to this architecture. We present details of its registers and memory architecture. It supports two memory architectures: protected-mode and real-mode. Protected-mode architecture is the native mode and the real-mode is provided to mimic the 16-bit 8086 memory architecture. Both modes support segmented memory architecture. It is important for the assembly language programmer to understand the segmented memory organization. Other details of this architecture are given in later chapters.

Introduction

Intel introduced microprocessors way back in 1969. Their first 4-bit microprocessor was the 4004. This was followed by the 8080 and 8085 processors. The work on these early microprocessors led to the development of the Intel architecture (IA). The first processor in the IA family was the 8086 processor, introduced in 1979. It has a 20-bit address bus and a 16-bit data bus.

The 8088 is a less expensive version of the 8086 processor. The cost reduction is obtained by using an 8-bit data bus. Except for this difference, the 8088 is identical to the 8086 processor. Intel introduced segmentation with these processors. These processors can address up to four segments of 64 KB each. This IA segmentation is referred to as the real-mode segmentation and is discussed later in this chapter.

The 80186 is a faster version of the 8086. It also has a 20-bit address bus and 16-bit data bus, but has an improved instruction set. The 80186 was never widely used in computer systems. The real successor to the 8086 is the 80286, which was introduced in 1982. It has a 24-bit address bus, which implies 16 MB of memory address space. The data bus is still 16 bits wide, but the 80286 has some memory protection capabilities. It introduced the protection mode into the IA architecture. Segmentation in this new mode is different from the real-mode segmentation. We present details on this new segmentation later. The 80286 is backward compatible in that it can run the 8086-based software.

Intel introduced its first 32-bit processor—the 80386—in 1985. It has a 32-bit data bus and 32-bit address bus. It follows their 32-bit architecture known as IA-32. The memory address space has grown substantially (from 16 MB address space to 4 GB). This processor introduced paging into the IA architecture. It also allowed definition of segments as large as 4 GB. This effectively allowed for a "flat" model (i.e., effectively turning off segmentation). Later sections present details on this aspect. Like the 80286, it can run all the programs written for 8086 and 8088 processors.

The Intel 80486 processor was introduced in 1989. This is an improved version of the 80386. While maintaining the same address and data buses, it combined the coprocessor functions for performing floating-point arithmetic. The 80486 processor has added more parallel execution capability to instruction decode and execution units to achieve a scalar execution rate of one instruction per clock. It has an 8 KB onchip L1 cache. Furthermore, support for the L2 cache and multiprocessing has been added. Later versions of the 80486 processors incorporated features such as energy saving mode for notebooks.

The latest in the family is the Pentium series. It is not named 80586 because Intel found belatedly that numbers couldn't be trademarked! The first Pentium was introduced in 1993. The Pentium is similar to the 80486 but uses a 64-bit wide data bus. Internally, it has 128- and 256-bit wide datapaths to speed up internal data transfers. However, the Pentium instruction set supports 32-bit operands like the 80486 processor. It has added a second execution pipeline to achieve superscalar performance by having the capability to execute two instructions per clock. It has also doubled the onchip L1 cache, with 8 KB for data and another 8 KB for the instructions. Branch prediction has also been added.

The Pentium Pro processor has a three-way superscalar architecture. That is, it can execute three instructions per clock cycle. The address bus has been expanded to 36 bits, which gives it an address space of 64 GB. It also provides dynamic execution including out-of-order and speculative execution. In addition to the L1 caches provided by the Pentium, the Pentium Pro has a 256 KB L2 cache in the same package as the CPU.

The Pentium II processor has added multimedia (MMX) instructions to the Pentium Pro architecture. It has expanded the L1 data and instruction caches to 16 KB each. It has also added more comprehensive power management features including Sleep and Deep Sleep modes to conserve power during idle times.

The Pentium III processor introduced streaming SIMD extensions (SSE), cache prefetch instructions, and memory fences, and the single-instruction multiple-data (SIMD) architecture for concurrent execution of multiple floating-point operations. Pentium 4 enhanced these features further.

Intel's 64-bit Itanium processor is targeted for server applications. For these applications, the 32-bit memory address space is not adequate. The Itanium uses a 64-bit address bus to provide substantially larger address space. Its data bus is 128 bits wide. In a major departure, Intel has moved from the CISC designs used in their 32-bit processors to RISC orientation for their 64-bit Itanium processors. The Itanium also incorporates several advanced architectural features to provide improved performance for the high-end server market.

In the rest of the chapter, we look at the basic architectural details of the IA-32 architecture. Our focus is on the internal registers and memory architecture. Other details are covered in later chapters.

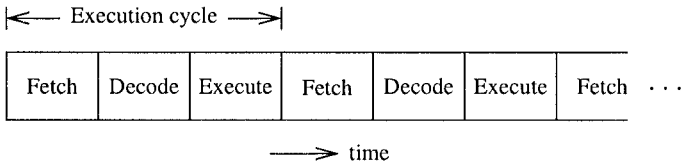

Figure 4.1 Execution cycle of a typical computer system.

Processor Execution Cycle

The processor acts as the controller of all actions or services provided by the system. It can be thought of as executing the following cycle forever:

1. Fetch an instruction from the memory;
2. Decode the instruction (i.e., identify the instruction);
3. Execute the instruction (i.e., perform the action specified by the instruction).

This process is often referred to as the *fetch-decode-execute* cycle, or simply the *execution* cycle.

The execution cycle of a processor is shown in Figure 4.1. As discussed in the last chapter, *Fetching* an instruction from the main memory involves placing the appropriate address on the address bus and activating the memory read signal on the control bus to indicate to the memory unit that an instruction should be read from that location. The memory unit requires time to read the instruction at the addressed location. The memory then places the instruction on the data bus. The processor, after instructing the memory unit to read, waits until the instruction is available on the data bus and then reads the instruction.

Decoding involves identifying the instruction that has been fetched from the memory. To facilitate the decoding process, machine language instructions follow a particular instruction-encoding scheme.

To *execute* an instruction, the processor contains hardware consisting of control circuitry and an arithmetic and logic unit (ALU). The control circuitry is needed to provide timing controls as well as to instruct the internal hardware components to perform a specific operation. As described in Chapter 2, the ALU is mainly responsible for performing arithmetic operations (such as `add` and `divide`) and logical operations (such as `and`, `or`) on data.

In practice, instructions and data are not fetched, most of the time, from the main memory. There is a high-speed cache memory that provides faster access to instructions and data than the main memory. For example, the Pentium processor provides a 16 KB on-chip cache. This is divided equally into data cache and instruction cache. The presence of on-chip cache is transparent to application programs—it helps improve application performance.

Processor Registers

The IA-32 architecture provides ten 32-bit and six 16-bit registers. These registers are grouped into general, control, and segment registers. The general registers are further divided into data, pointer, and index registers as shown in Figures 4.2 and 4.3.

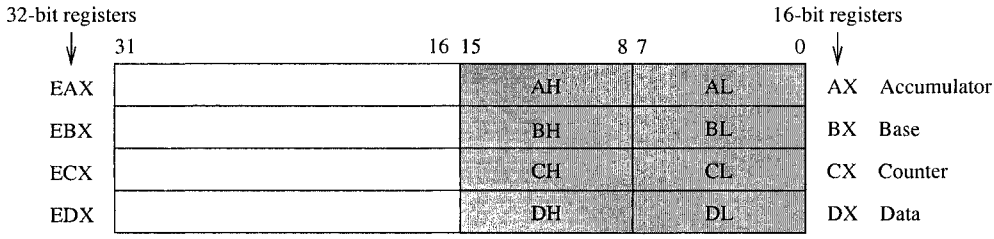

Figure 4.2 Data registers (the 16-bit registers are shown shaded).

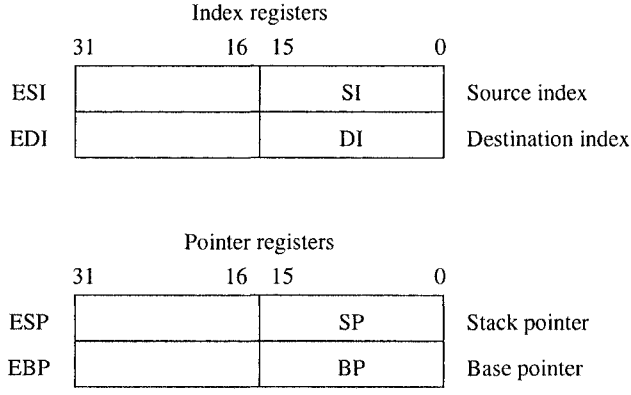

Figure 4.3 Index and pointer registers.

Data Registers

There are four 32-bit data registers that can be used for arithmetic, logical, and other operations (see Figure 4.2). These four registers are unique in that they can be used as follows:

- Four 32-bit registers (EAX, EBX, ECX, EDX); or
- Four 16-bit registers (AX, BX, CX, DX); or
- Eight 8-bit registers (AH, AL, BH, BL, CH, CL, DH, DL).

As shown in Figure 4.2, it is possible to use a 32-bit register and access its lower half of the data by the corresponding 16-bit register name. For example, the lower 16 bits of EAX can be accessed by using AX. Similarly, the lower two bytes can be individually accessed by using the 8-bit register names. For example, the lower byte of AX can be accessed as AL and the upper byte as AH.

The data registers can be used without constraint in most arithmetic and logical instructions. However, some registers in this group have special functions when executing specific instructions. For example, when performing a multiplication operation, one of the two operands should be in the EAX, AX, or AL register depending on the operand size. Similarly, the ECX or CX register is assumed to contain the loop count value for iterative instructions.

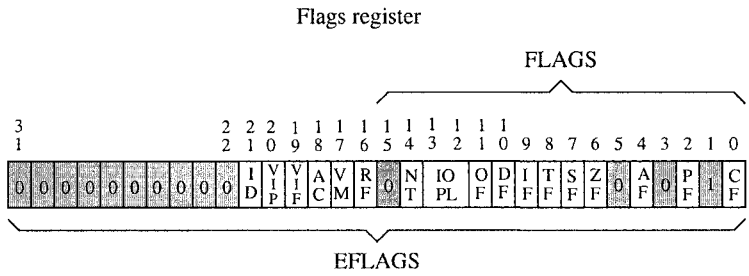

Status flags

CF = Carry flag
PF = Parity flag
AF = Auxiliary carry flag
ZF = Zero flag
SF = Sign flag
OF = Overflow flag

Control flag

DF = Direction flag

System flags

TF = Trap flag
IF = Interrupt flag
IOPL = I/O privilege level
NT = Nested task
RF = Resume flag
VM = Virtual 8086 mode
AC = Alignment check
VIF = Virtual interrupt flag
VIP = Virtual interrupt pending
ID = ID flag

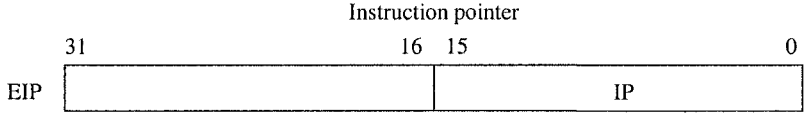

Figure 4.4 Flags and instruction pointer registers.

Pointer and Index Registers

Figure 4.3 shows the four 32-bit registers in this group. These registers can be used either as 16- or 32-bit registers. The two index registers play a special role in the string processing instructions (these instructions are discussed in Chapter 17). In addition, they can be used as general-purpose data registers.

The pointer registers are mainly used to maintain the stack. Even though they can be used as general-purpose data registers, they are almost exclusively used for maintaining the stack. The stack implementation is discussed in Chapter 11.

Control Registers

This group of registers consists of two 32-bit registers: the instruction pointer register and the flags register (see Figure 4.4). The processor uses the instruction pointer register to keep track of the location of the next instruction to be executed. Instruction pointer register is sometimes called the

15 … 0	
CS	Code segment
DS	Data segment
SS	Stack segment
ES	Extra segment
FS	Extra segment
GS	Extra segment

Figure 4.5 The six segment registers support the segmented memory architecture.

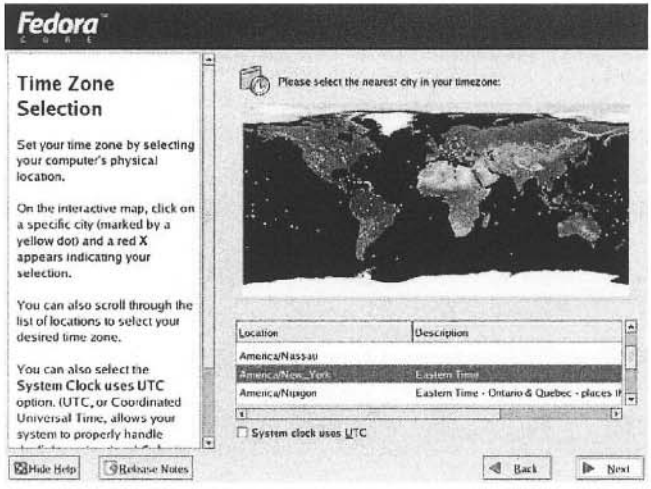

Figure 5.29 Time zone selection screen.

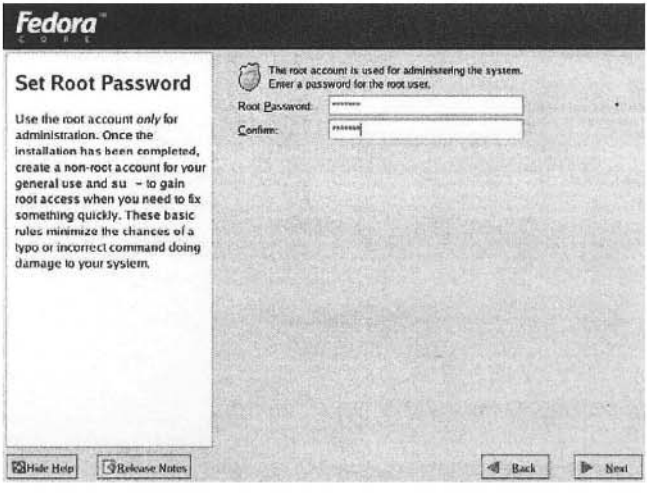

Figure 5.30 Root password selection screen.

If you want to select a different set of packages, or if you want to add some extra packages, you can choose the "Customize software package to be installed" option. For example, the default selection does not install NASM or DDD that we need. However, in our installation, we stick with the default selection as we can easily add the missing packages later.

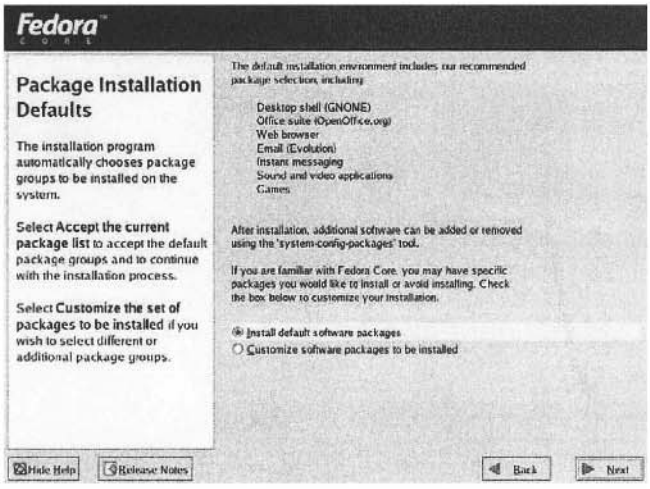

Figure 5.31 Default package selection screen

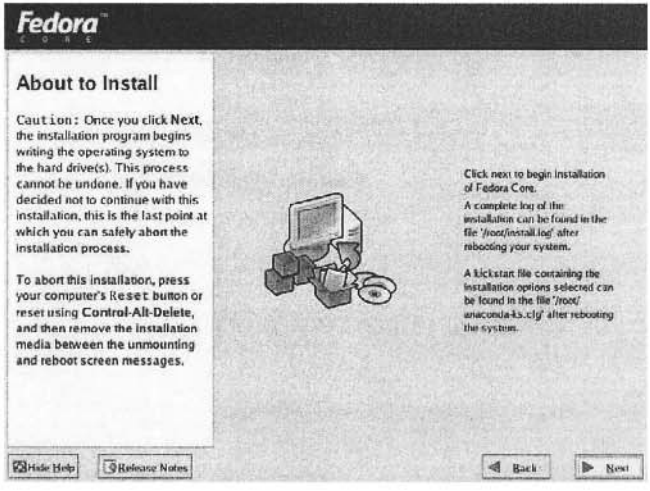

Figure 5.32 About to install screen.

Installation Process Continues

If you are using the CD-ROMs for the installation, the installer informs you that three Fedora Core CDs are required for the installation to proceed. It gives an option of either continuing with the installation or to reboot as shown in Figure 5.33.

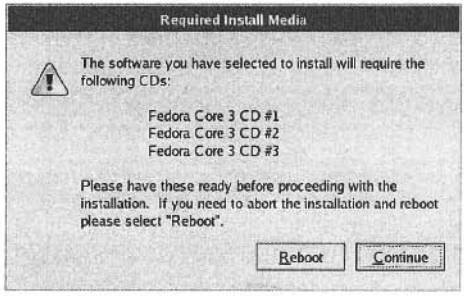

Figure 5.33 Before starting the actual installation process, the installer displays the required media information (if you are using the CD-ROM media).

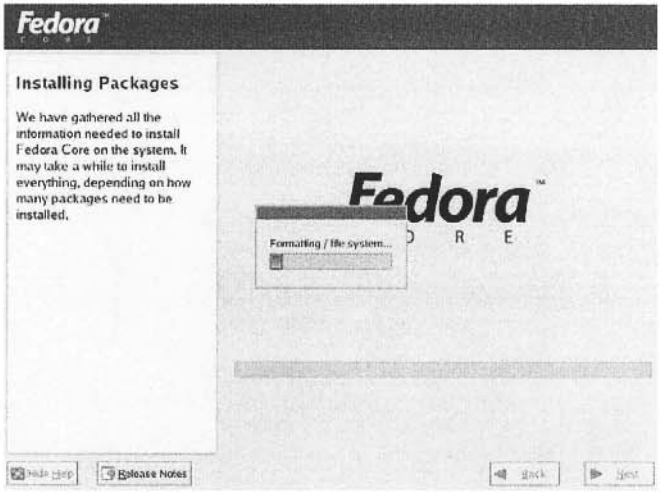

Figure 5.34 Installation process begins by formatting file systems.

The installer has collected the necessary information and is ready to start the installation. This is your last chance to safely abort the installation process. Click "Next" to proceed with the installation. After this, the installation proceeds automatically. If you are using the CDs, the installer prompts you to change the CD a couple of times.

The installation begins by formatting the file system (Figure 5.34). Once the installation is done, you are prompted to reboot (Figure 5.35). Make sure to remove the media (DVD or CD) before clicking the reboot button.

Post-Install Configuration

After rebooting the system, you are presented with the screen shown in Figure 5.36. There are a few more steps to go through before the system is ready for use. These steps are:

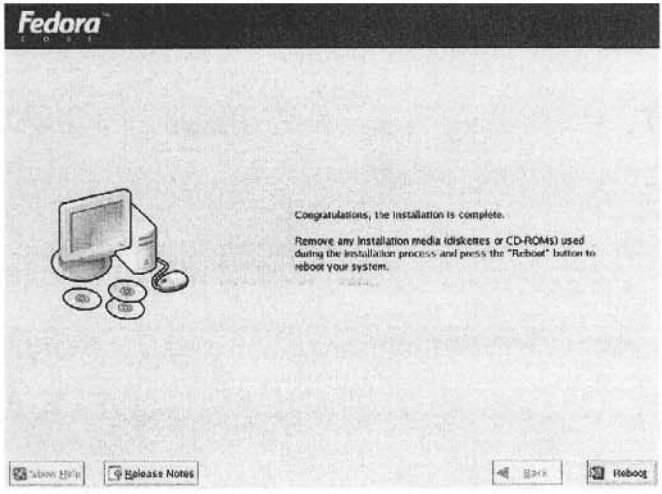

Figure 5.35 You get the congratulatory message when the installation is completed.

Figure 5.36 Post-install configuration is the last step involved in completing the installation process.

- Accepting licensing agreement;
- Setting/confirming the time and date information;
- Setting the display properties including the resolution;
- Creating a system user: You should not use the `root` account created during the installation as your regular account. This account should be reserved for system maintenance

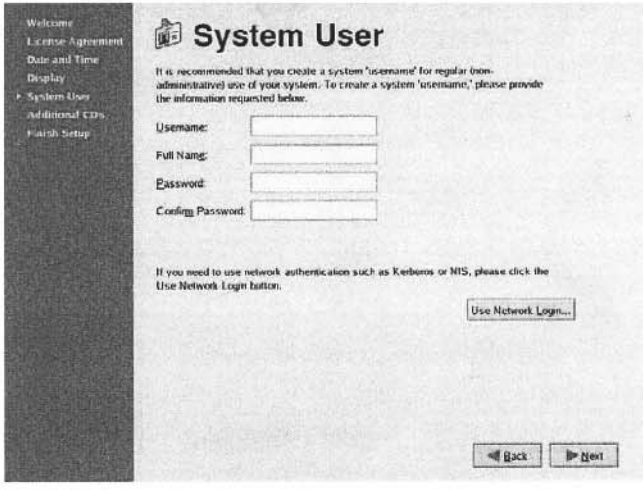

Figure 5.37 You can create a system user account as part of the post-install operations.

activities only. It is strongly recommended that you create an account for your routine use (see Figure 5.37). Alternatively, you can do this later by using a system tool.

- If you want to load additional packages, you can do here. But we prefer to do this later by using the package management tool provided by Fedora.

Congratulations! Your long wait is over. When you start Fedora the next time, it boots up normally and presents you with a login screen. This requests you to enter your user name and password. After you have successfully logged into your account, the system will display the GNOME desktop (for a quick peek at this desktop, see Figure 6.1 on page 116).

Installing and Removing Software Packages

The default software packages installed for the "Personal Desktop" do not include the "Development Tools" group that includes compilers such as `gcc`, `nasm` assembler, and `ddd` debugger. In this section we show how software packages can be installed and removed. Since we need these development tools to program in the assembly language, we install them to illustrate package management.

You can add or remove packages by the package management tool that comes with the Fedora Linux system. It can be invoked from the `Applications` pull-down menu. From this menu, select `System Settings` and then `Add/Remove Applications` as shown in Figure 5.38. If you are not logged in as the root user, which is recommended, it will first ask you for the root password. The package management tool then scans the packages for their status and displays this information as shown in Figure 5.39. For example, we have installed the X Window System and the GNOME Desktop but not the KDE and XFCE desktops.

Scroll down this list until you find the `Development Tools` package group and check the box to select this group of tools for installation (see Figure 5.40). A package group consists of

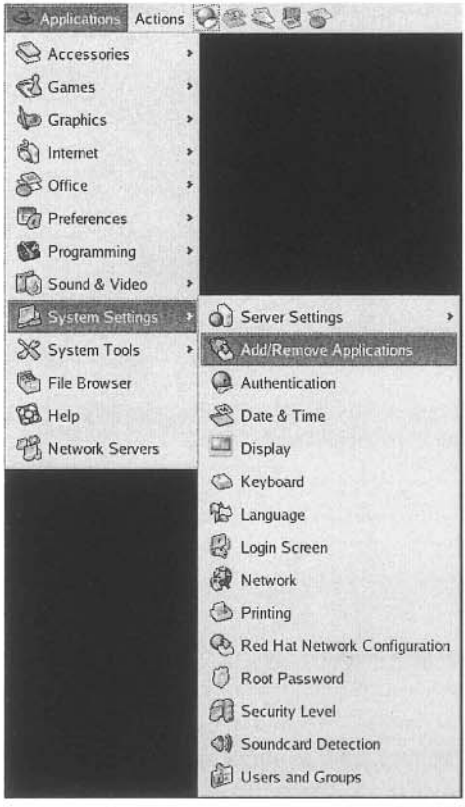

Figure 5.38 Invoking the package management tool from the GNOME desktop.

several standard packages and some extra packages. The standard packages are always selected by default. These packages, which include the `gcc` C compiler and the `gdb` debugger, are always available when the group is installed. In addition, several extra packages are also selected by default. However, `nasm` and `ddd` are not part of the default extra packages selected for installation. To see the package details for the selected group, click `details`. This opens a Package Details window that gives details on the standard packages selected and the extra packages available along with their default selection. We scroll down this list to select `nasm` and `ddd` as shown in Figure 5.41.

To install these packages, close the package details window and click `Update` in the Package Management window. The tool collects the necessary information and prepares to install the packages. During this stage, it checks for package dependencies and collects a list of packages. This list includes the actual packages you have selected and any other packages that are required by the selected packages. Once this analysis is done and a package list has been prepared, you will see the prompt shown in Figure 5.42. It gives you information on the number of packages selected and the amount of disk space required. If for some reason you want to abort the installation, this is a good time. If you want to see the packages selected, click the `Show Details` button.

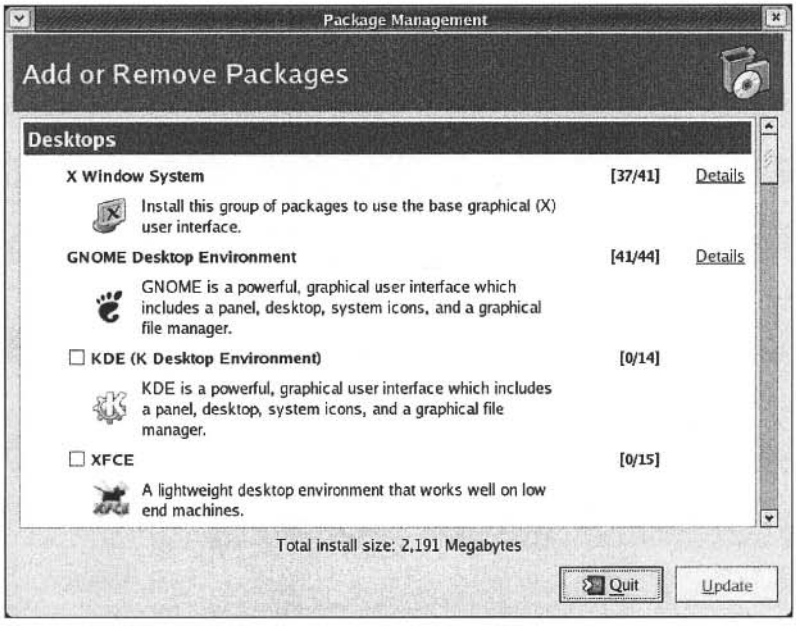

Figure 5.39 Initial screen of the package management tool.

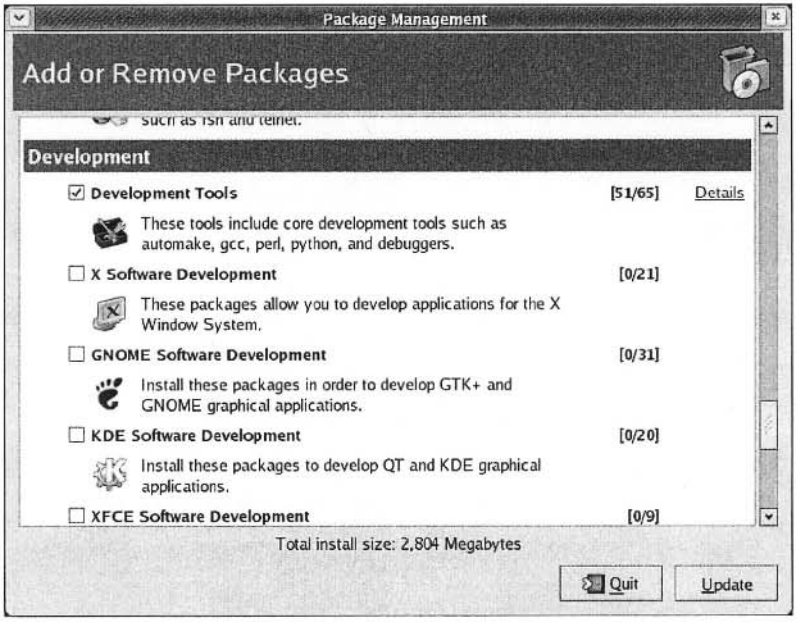

Figure 5.40 Tools available under the `Development` category.

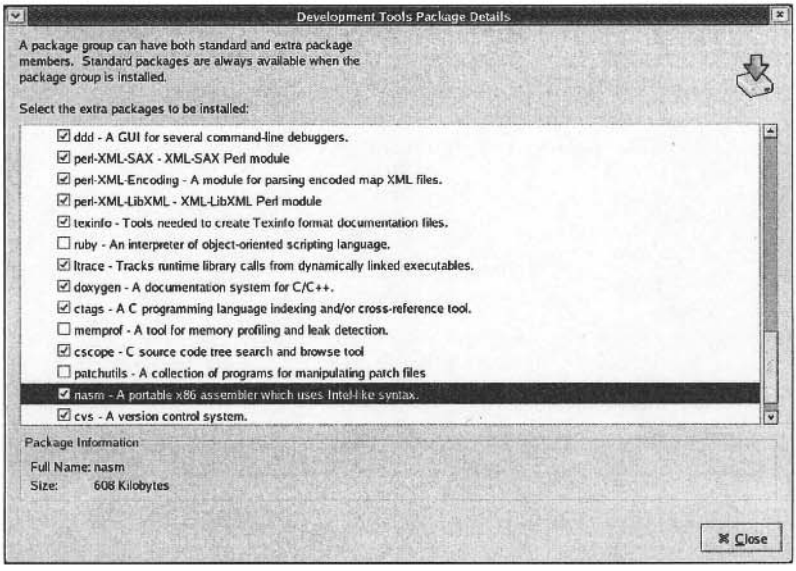

Figure 5.41 Adding the `nasm` and `ddd` packages.

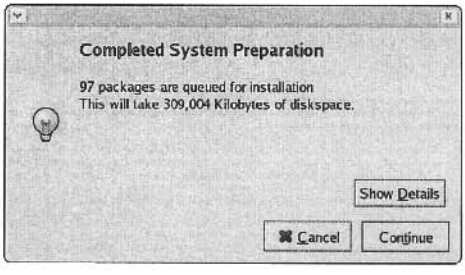

Figure 5.42 Once the packages are ready to install, you can view the details by clicking `Show Details` button.

Once you click `Continue`, the installation process begins. During the installation of the selected packages, the tool will prompt you for the appropriate Fedora CD. Since we are using DVD-ROM, ignore this message. That's it!

To remove packages that have been installed, you follow the same procedure. Of course, you have to uncheck the packages/groups that you want to remove from the system.

Mounting Windows File System

When you have two operating systems, you would like to share files between the two systems. Of course, you can always use a removable medium such as a floppy disk or a memory stick to

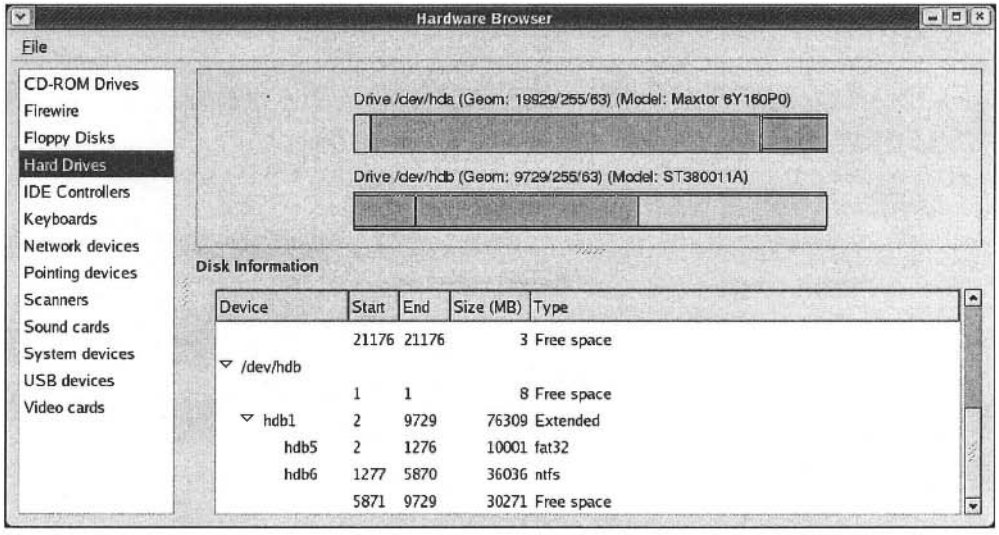

Figure 5.43 You can use the hardware browser to get information on the partitions.

transfer files between the two systems. There is a better solution that eliminates the need for file copying. In this section we show how you can mount a Windows partition so that Linux can access this partition.

There is one restriction—Linux is not able to read NTFS partitions, at least not yet. So the partition that you want to share between the Windows and Linux operating systems has to be a FAT32 partition. Even if you are using FAT32 for your Windows, you do not want to make it sharable for security reasons. For example, a single command in Linux can wipe out all the Windows files. Your Windows operating system, on purpose, hides some system files that you should not normally access. One such example is the `boot.ini` file to manage the boot process. In Linux, you see all the Windows files and you may accidentally modify the contents or delete a file. This is particularly so during the initial learning stages. Therefore, it is a good idea to create a separate partition that you want to use for sharing. In our example system, we created a 10 GB partition to facilitate this sharing. We would like to mount this partition under Linux so that we could access the files from the Windows system.

As a first step we have to find out the device number assigned to the shared partition. We can use the Hardware Browser to get this information. The Hardware Browser can be invoked from the `Applications` menu by selecting `System Tools` and then `Hardware Browser`. We can use this browser to get information on the system hardware such as CD-ROM drives, floppy disks, hard drives, keyboard, and so on.

In order to run this browser, you need administrative privileges. That means, if you are not running it as the root, you will be asked for the root password. To get the partition information that we are interested here, we select Hard Drives as shown in Figure 5.43. From this information we notice that the 10 GB FAT32 shared partition is assigned `\dev\hdb5`. To share this partition, we need to mount this partition.

Mounting a partition involves creating a mount point, which is a directory. In our example, we create a mount point called `share` in the `\mnt` directory. Since we have not yet discussed the Linux commands, you can type the following command in the command terminal window [1] to create this directory:

```
mkdir /mnt/share
```

After creating this directory we can mount the partition using the following command:

```
mount -t vfat /dev/hdb5 /mnt/share
```

Of course, you have to replace `/dev/hdb5` with your partition number. It is most likely going to be `/dev/hdaX` where `X` is a number. To verify that the partition has been mounted, you can issue the `ls` command (similar to `dir` in Windows).

```
ls /mnt/share
```

This command displays the files and directories in this partition.

The `mount` command mounts the partition for this session. It is not available when you login the next time. Of course, you can issue the mount command every time you login. We can avoid this scenario by modifying the `fstab` file. This file is in the `/etc` directory. You need to append the following line to this file:

```
/dev/hdb5      /mnt/share     vfat     auto,umask=0 0 0
```

Once this step is done, the partition is mounted automatically as the system reads this file every time you log into the system.

To edit the `/etc/fstab` file, use the text editor available under `Applications` pull-down menu by following `Accessories`⇒ `Text Editor`. This is a simple text editor that resembles the Windows `Wordpad` editor. We discuss this editor in the next chapter.

To open the `fstab` file you need administrative privileges, which means you must be root to open this file in read-write mode. All other users can open this file in read-only mode. So be sure to login as the root to modify this file.

You can use the `Open` icon to open a file for editing (see Figure 5.44). This pops up the `Open File...` window to select the file (see Figure 5.45). You can start by double-clicking the `Filesystem`, then `etc` directory, and finally the `fstab` file to open it for editing. The contents of the `fstab` file in our example system are shown in Figure 5.44.

There are several other editors available in Linux. Some of the popular ones are the `vi` and `emacs` editors. We describe the `vi` editor in the next chapter.

Summary

We have provided a detailed step-by-step description of the Fedora Core 3 installation process. The installation is a two-step process: creating sufficient disk space for the Fedora system and installing the operating system. The first step is not required if Linux is the only operating system you want to install. However, if you want to keep the existing Windows operating system and install Linux as the second operating system, the first step is necessary. It often involves partitioning the disk to make room for Linux.

We have introduced three partitioning tools for this purpose:

[1] The command terminal can be invoked from the `Applications` menu under `System Tools` submenu. More details on the command terminal are on page 132.

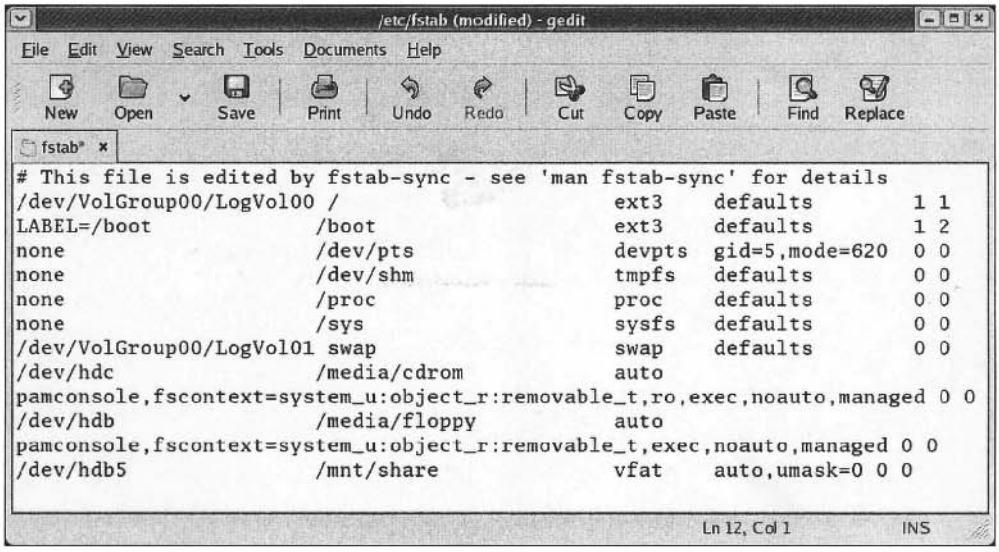

Figure 5.44 Contents of the `/etc/fstab` file after adding the last line to mount the shared partition.

- The `parted` tool that comes with Fedora is a text-based partitioning tool. It can be used on FAT32 and other types of partitions but not on NTFS partitions. For NTFS partitions, you can use one of the other two tools.
- The second tool, `QTparted`, works on NTFS partitions as well as others. It provides a nice user-friendly graphical interface and uses a variety of partitioning tools including `parted`. Its user interface closely resembles that of the `ParttionMagic` tool.
- The last tool we presented in this chapter, `PartitionMagic`, is a commercial partitioning tool. This tool works with different file systems including NTFS partitions.

The Fedora Core 3 Linux can be installed from the DVD-ROM accompanying this book. If your system does not have a DVD-ROM drive, you can burn CDs from the CD image files provided in the second DVD. We have given detailed instructions to install Personal Desktop system that is suitable for new users.

The default software packages selected for this installation type do not include all the software we need. Specifically, the Personal Desktop installation excludes the development tools group. This group includes the C compilers, assemblers, and debuggers that we need for our assembly language programming. However, using the Fedora's package management tool, it is rather straightforward to install these developmental tools. We have given detailed instructions on how you can do this.

Finally, we presented details on sharing files between the Windows and Linux operating systems. The Linux operating system can see the FAT32 partitions but not the NTFS partitions. For this reason, we suggested a small partition for sharing the files between the two operating systems. In our example, we set this partition to 10 GB, but you can set it to whatever size is appropriate in your case. We have given step-by-step instructions to mount such shared partitions.

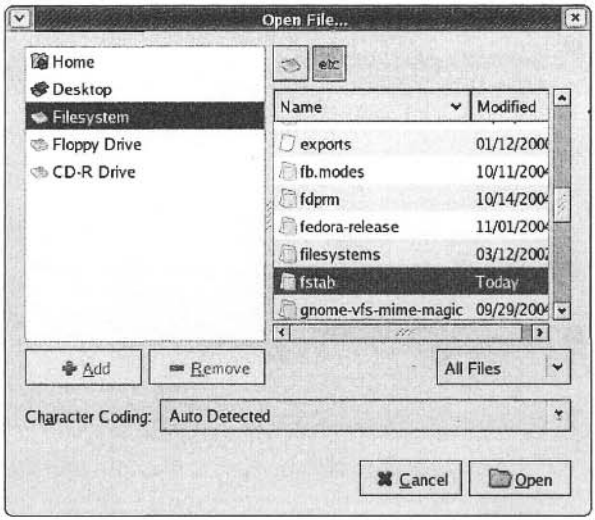

Figure 5.45 Selection of the `/etc/fstab` file using the `open file` window.

Getting Help

The Fedora Linux has been installed on five different systems (desktops and laptops) using the procedure described in this chapter. In all these systems, the installation proceeded smoothly. Even though we have given detailed instructions to install the Fedora Linux operating system, it is still possible that you encounter installation problems. There are several places you can turn to for help.

A good starting point is the extensive and detailed bug report database maintained by Red Hat at `http://bugzilla.redhat.com`. Here you can enter the bug number (if you know it) or keywords to search for information on your problem.

Several online sources are also available to help resolve installation problems. For example, `LinuxQuestions.org` maintains several forums for Linux-related issues including installation problems at `http://www.linuxquestions.org/questions`. Another good source is the mailing list maintained by Red Hat at `http://www.redhat.com/mailman/listinfo/fedora-list`.

You can also use a good search engine such as Google (`http://www.google.com`) to search the Internet on how others solved your installation problem.

6

Using Linux

Now that you have installed the Fedora Linux on your system, it is time to learn the basics of the Linux operating system. This chapter assumes that you are familiar with another operating system such as Windows XP. Our focus is on the Fedora 3 Linux. We look at both the graphical user interface (GUI) and the command line interface (CLI) provided by the system. For new users, the GUI provides an easy-to-use, point-and-click type of interface. However, as you get familiar with the system, the command line interface tends to be more efficient. We discuss the basics of the command line interface and several simple but useful commands. The overview presented here is sufficient to proceed with our goal of learning the assembly language programming.

Introduction

Assuming that you are new to the Linux operating system, this chapter gives more details on using the Fedora 3 Linux. You have to login to an account in order to use the Linux system. To log into the system, the login screen first prompts you for your login username. Then you will be asked to enter your password for the account. This brings up the GNOME desktop shown in Figure 6.1. This is the default desktop in Fedora 3. The panel at the top contains two pull-down menus: `Applications` and `Actions`. The `Applications` menu provides various applications and systems tools. It provides several useful GUI applications including games, graphics, system tools, and system settings (see Figure 6.2a). The `Actions` menu can be used to run applications, search for files, lock the screen, and logout as shown in Figure 6.2b.

The icons next to the `Actions` menu can be used to launch applications quickly. You can click these launch panel icons to launch a Web browser, email reader, word processor, presentations creator, or a spreadsheet. You can customize the launch panel by adding applications of your choice. For example, we have added the command terminal to the launch panel shown in Figure 6.1 (see the icon next to `Actions` menu).

The workspace, appears as black in Figure 6.1, displays four shortcuts: `Computer`, your home directory, trash, and a USB hard drive labeled PORTABLE. By clicking the `Computer`, you will see the various drives (floppy drive, CD-ROM drives, and hard disks), your file system, and networks. It is a good idea to get familiar with the desktop by playing with the various menus and icons. Later we describe some of the applications available to perform commonly required tasks.

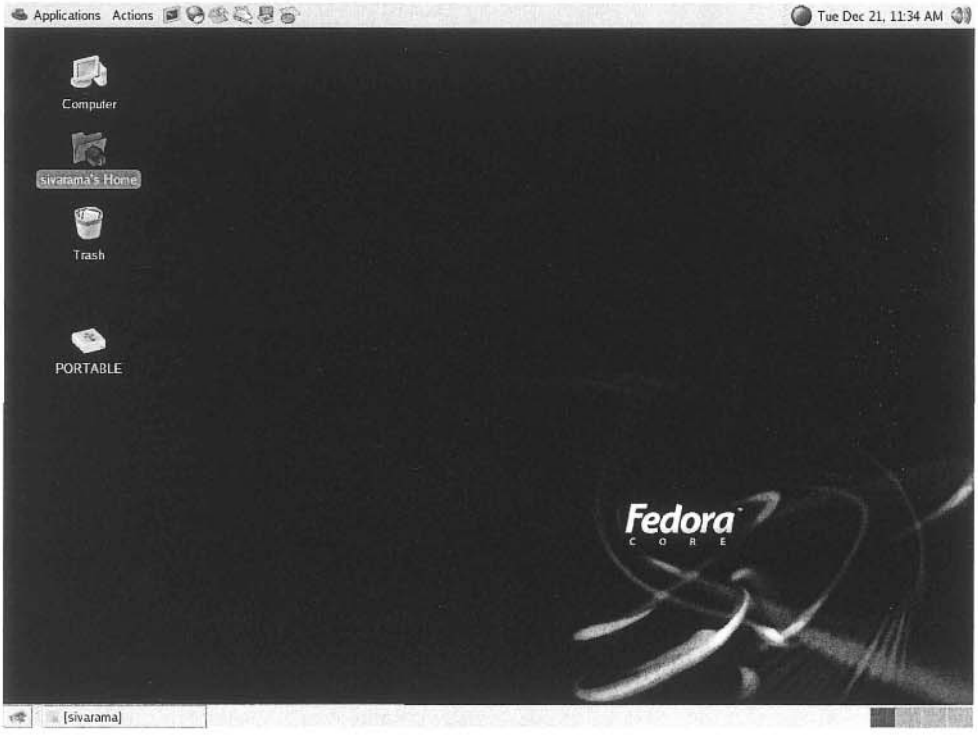

Figure 6.1 Initial Fedora screen with a USB hard drive (`PORTABLE`).

To logout of your account, you can use the `Actions` menu as shown in Figure 6.2b. When you select `Logout` from the `Actions` menu, a popup window appears with three options: logout of the account, shutdown the system, or restart the system. If you opt for logout, it will bring the login screen. The other options can be selected to either shutdown or restart the system.

Which Account to Use?

During the installation, you created two accounts for yourself: a root account and a system user account. Always use your system user account for non-administrative activities and reserve the root account for special administrative tasks. Note that most administrative tasks can also be done from your system user account. If a task requires administrative privileges, the system will ask you for the root password. On the other hand, if you login as the root, the system gives you permission to do whatever you want. This can lead to mishaps that you did not anticipate.

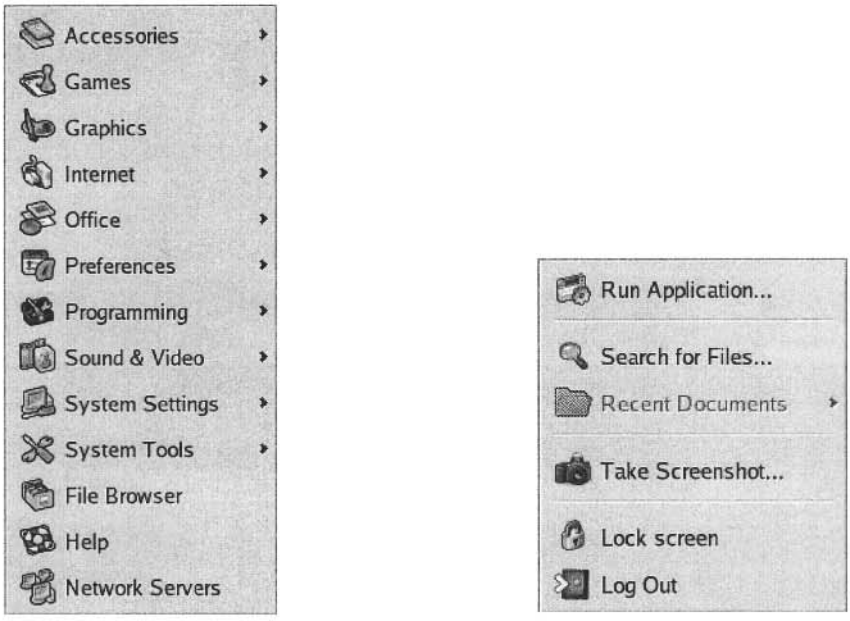

(a) `Applications` menu (b) `Actions` menu

Figure 6.2 The `Applications` and `Actions` pull-down menus of the GNOME desktop.

You can run your programs either by using the desktop or from the command line interface. The first part of the chapter describes several applications to manage the system. Later part concentrates on the command line interface.

Setting User Preferences

When you installed the Fedora Linux, you have already configured several of your system devices such as the display and keyboard. It is also straightforward to configure these devices after the installation. This configuration can be done from the `Applications` pull-down menu under the `Preferences` menu as shown in Figure 6.3. Next we look at some of these tools.

Keyboard Configuration Tool

Figure 6.4 shows the keyboard configuration tool window. It provides four functional areas: Keyboard, Layouts, Layout Options, and Typing Break. In the `Keyboard` area, you can set two main options:

- You can decide if you want the repeat-key functionality when a key pressed and held down. To enable this functionality, select the first checkbox as shown in Figure 6.4. If this option is enabled, you can select the initial delay and the rate of repetition by using the two sliders.

Figure 6.3 The `Preferences` menu.

- The second checkbox allows you to enable the cursor to blink in the fields and text boxes. You can use the slider to select the cursor blink frequency. You can test the setting by typing a sample text in the test area.

The `Layouts` tabbed window can be used to select your keyboard model. The default is the generic 105-key PC keyboard. This window also allows you to add or remove keyboard layouts. By default, the U. S. English layout is selected.

The `Layouts Options` window allows you to select several options for the behavior of the various keys such as `Alt` and `CapsLock`.

The `Typing Break` tabbed window can be used to set typing break preferences. You can set how long you want to work and how long the breaks should be. For example, you can select to work 30 minutes and take a break for 3 minutes. The system will lock the screen to force you to take the 3-minute break after 30 minutes of typing. There is also a checkbox that allows you to postpone the breaks.

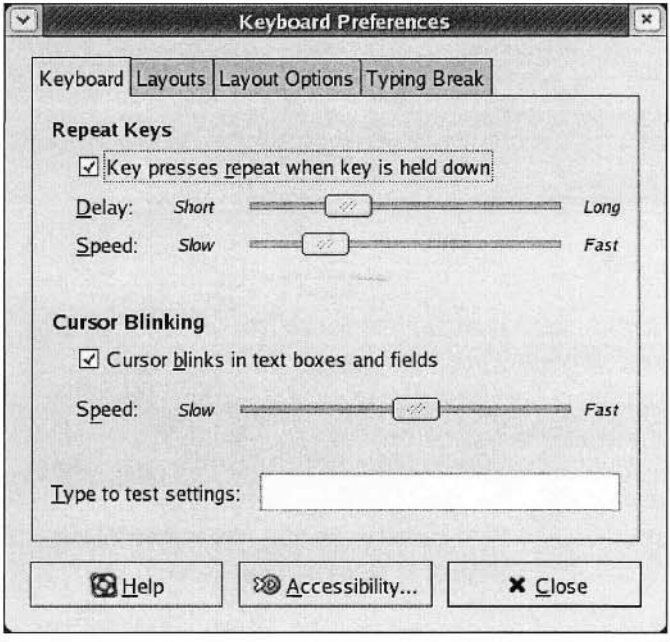

Figure 6.4 The keyboard configuration window.

Mouse Configuration Tool

The mouse configuration tool window is shown in Figure 6.5. It has three functional areas to set the preferences. The `Buttons` window can be used to set the mouse orientation (left-handed or right-handed) as well as the double-click timeout period.

Use the `Cursors` tabbed window to select the cursor size (small, medium, or large). The changes you make will take effect when you login the next time. You can also select the option that highlights the cursor when you press the `Ctrl` key. This option is helpful to locate the cursor.

The `Motion` window can be used to set the motion preferences. It provides two sliders to set the speed of the mouse pointer and the sensitivity of the mouse pointer to the movement of the mouse. It also has a third slider to specify the distance you must move an item in order to interpret the move as the drag-and-drop action.

Screen Resolution Configuration

You can use the screen resolution tool to set the resolution of your screen. It allows you to select the resolution from the drop-down list (see Figure 6.6). You can also set the refresh rate for your screen. Once the selection is made, you can click the `Apply` button. The screen will reflect your selection and prompts you if you want to keep the new resolution or revert back to the previous resolution. In general, the installer does a good job in selecting the resolution and refresh rates appropriate for your screen during the installation.

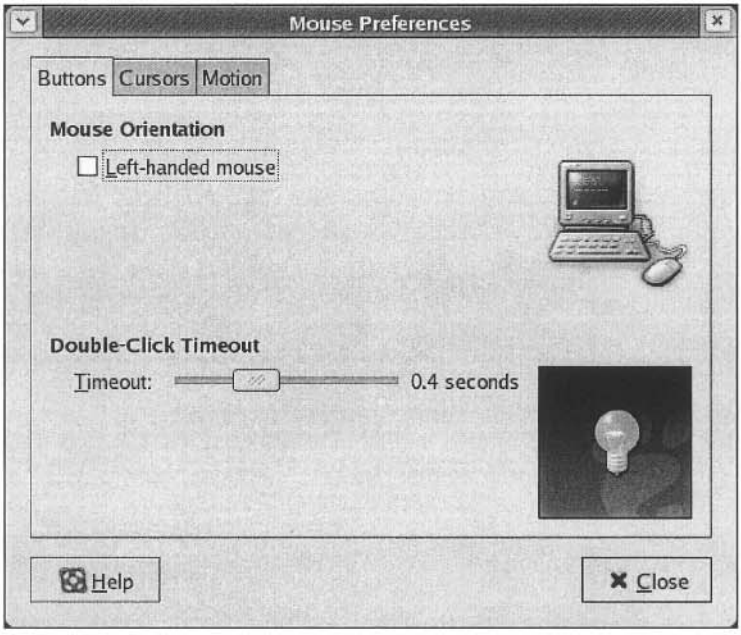

Figure 6.5 The mouse configuration window.

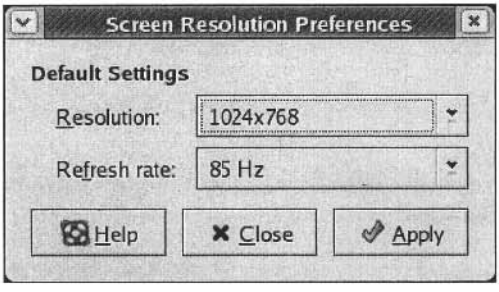

Figure 6.6 The screen resolution window.

Changing Password

You can use the password tool to change the user password. If you want to change your root account password, you should use the root password change tool available in the `System Setting` menu. The tool first requests your current password (see Figure 6.7). It then prompts you to enter the new password as shown in Figure 6.8. You are asked to reenter the new password to make sure that you did not make a mistake in entering your new password (Figure 6.9). The new password will be effective for your next login.

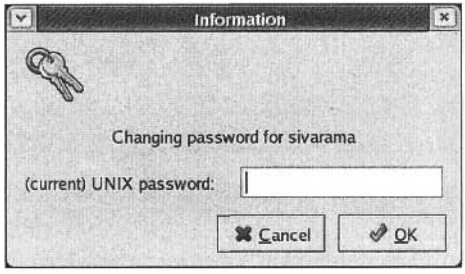

Figure 6.7 Changing the user password—screen 1.

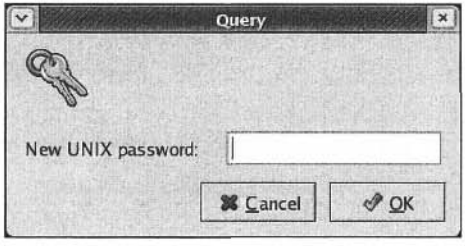

Figure 6.8 Changing the user password—screen 2.

Screensaver

The screensaver tool can be used to control the behavior of the screensaver, display power management, and so on. The functionality is divided into two groups: `Display Modes` and `Advanced` as shown in Figure 6.10. The `Display Modes` tabbed window is used to enable and control the behavior of the screensaver. The screensaver is activated either when the system is idle (when there is no mouse or keyboard activity) for a specified period of time, or when the screen is locked. Note that you can lock your screen by using the `Actions` menu (see Figure 6.2b on page 117).

The `Mode` drop-down menu gives you four options:

- *Disable Screen Saver:* Select this option if you don't want the screensaver.

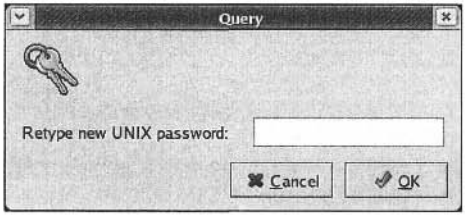

Figure 6.9 Changing the user password—screen 3.

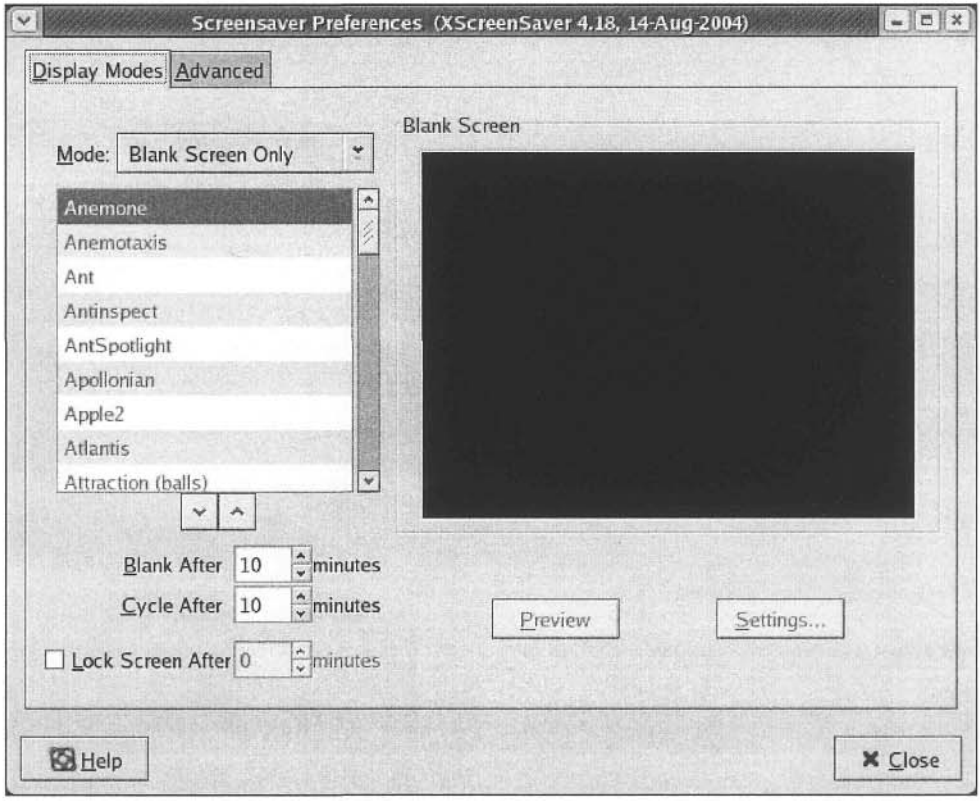

Figure 6.10 The `Display Modes` tabbed window can be used to enable and control the screensaver behavior.

- *Blank Screen Only:* This option not only enables the screensaver but also selects blank screen as your screensaver. This option is shown in Figure 6.10.
- *Only One Screen Saver:* This option allows you to select a single screensaver from the scroll-down display list. The selected screensaver is displayed in the test area. The `Settings` button allows you to customize the parameters of the selected screensaver. You can preview the selected screensaver by clicking the `Preview` button. You can exit the preview mode by pressing any key or clicking a mouse button.
- *Random Screen Saver:* You can select this option if you want more than one screensaver display, selected from the scroll-down display list. The `Cycle After` field allows you to select the time interval that each screensaver should be used before switching to another screensaver.

When the screensaver display is enabled (i.e., if you select any of the last three options), you can specify the idle time period before the screensaver is activated. You can set this period in minutes in the `Blank After` field.

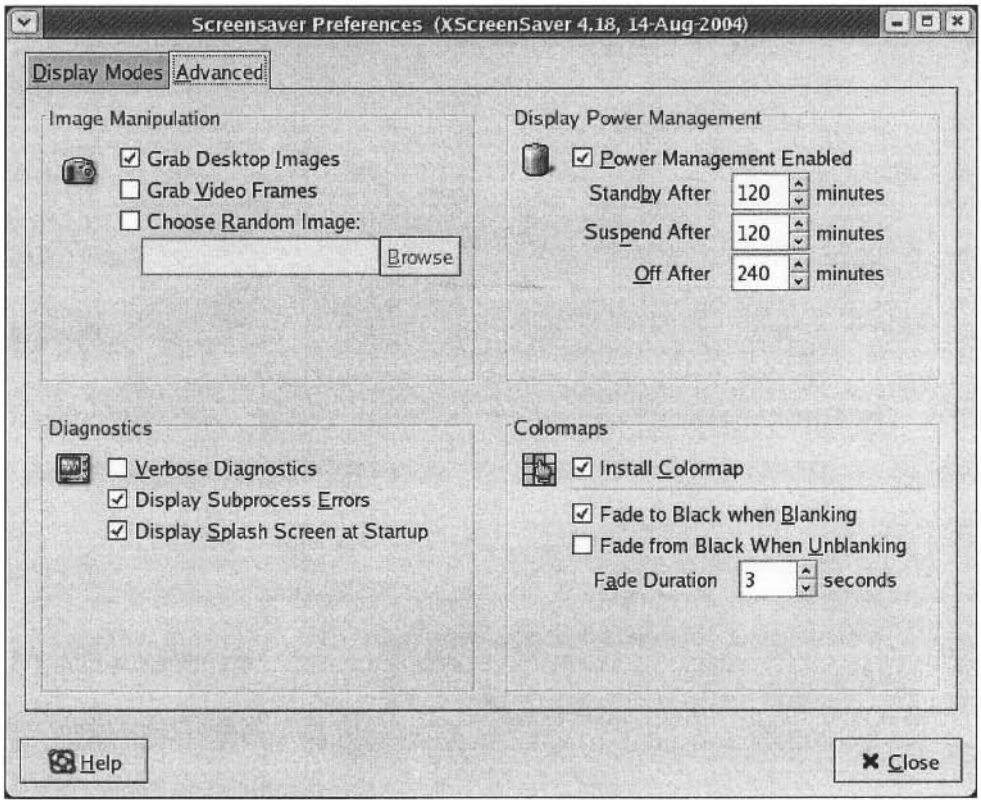

Figure 6.11 The `Advanced` tabbed window can be used to select the display power management options.

If you want to lock your screen after the screensaver is activated, select the `Lock Screen After` checkbox and enter the delay between screensaver activation and locking of the screen.

The `Advanced` tabbed window can be used to specify the display power management options as well as others shown in Figure 6.11. If you enable the power management, you can specify the standby, suspend, and off periods. In the standby mode, the screen is blank. In the suspend mode, the display enters the power-saving mode. The off period indicate the waiting time before the display is turned off.

System Settings

The system settings menu provides several services to control the system behavior. Since most of the tools in this menu control the behavior at the system level, these tools require root privileges. If you are logged into the system using your system user account, you will be prompted for the root account password before proceeding with the changes.

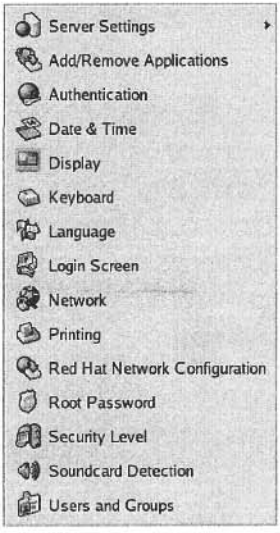

Figure 6.12 The `System Settings` menu.

The tools provided by the `System Settings` menu are shown in Figure 6.12. In the previous chapter, you have seen how the `Add/Remove Applications` tool can be used to load new software packages. This tool makes managing packages easy by checking the package dependencies and automatically loading all the necessary packages. Using the system settings menu, you can also change the root password, specify the security level, manage user accounts, and so on. In this section we show how the date and time as well as display properties can be set. We let you play with the other services available in this menu.

Setting Date and Time

You can set the date and time by using the `Date & Time` properties tool. It provides a very nice calendar interface to set these properties (see Figure 6.13). You have seen this type of interface during the post-installation setup. As shown in this figure, there are three tabbed windows. The first window can be used to set the time and date. The date can be specified by using the left and right arrows on the month and year. The time can be set by entering the three components: hour, minutes, and seconds.

The second tabbed window allows you to specify the network time protocol that should be used to synchronize your computer clock. This synchronization is useful as your computer clock drifts away from the actual time. The amount of drift depends on various factors including the temperature. The drift is measured in PPM (parts per million), which corresponds to 0.0001%. Since a day has 86,400 seconds, a drift of approximately 11.57 PPM means a difference of 1 second per day. The Network Time Protocol (NTP) is designed to synchronize computer clocks, which is important when communicating with other computers. NTP uses UTC (Universal Time Coordinated) as the reference time. UTC is an official standard that evolved from the GMT (Greenwich Mean Time). You can use this tabbed window to specify several options including whether you want to use NTP and so on.

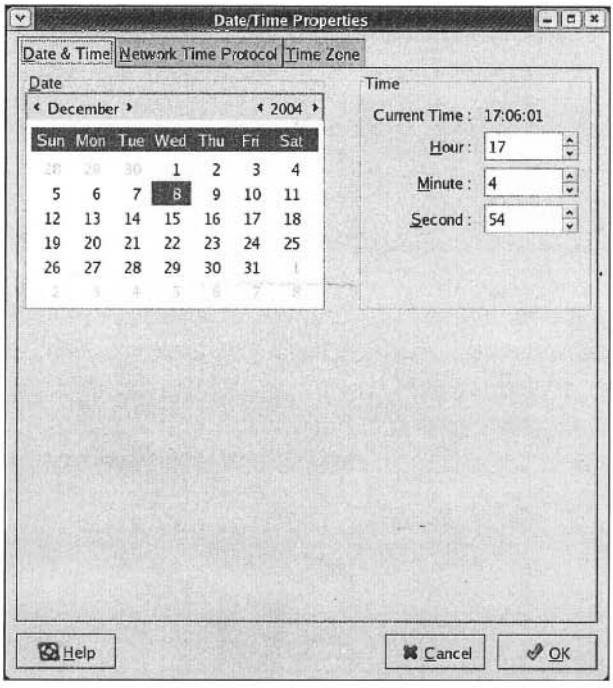

Figure 6.13 Setting the date and time.

The third tabbed window can be used to specify the time zone. You have set the time zone during the installation (see Figure 5.29 on page 103). This window provides the same screen as that in Figure 5.29.

Setting Display

As in the Date and Time tool, setting the display properties requires root privileges. It has three tabbed windows: `Settings`, `Hardware`, and `Dual head` as shown in Figure 6.14. The settings window lets you specify the screen resolution and color depth. You have seen a similar screen during the post-installation setup. You have also set the display resolution at the user-level before (see Figure 6.6).

The `Hardware` tabbed window allows you to configure the monitor type and the video card. The `Configure...` button displays a large list of monitors and video cards supported by Fedora 3. If your display and video card are not supported, use a generic type that closely matches your hardware. In general, though, the installer does a pretty good job in detecting your monitor type and video card or selecting an appropriate generic settings.

The third tabbed window can be used to enable and configure two displays. This window lets you configure the second video card and set the second screen resolution and color depth. In addition, you can select a desktop layout for the two screens—either individual desktops or spanned desktop. In the spanned desktop, your desktop is split between the two screens.

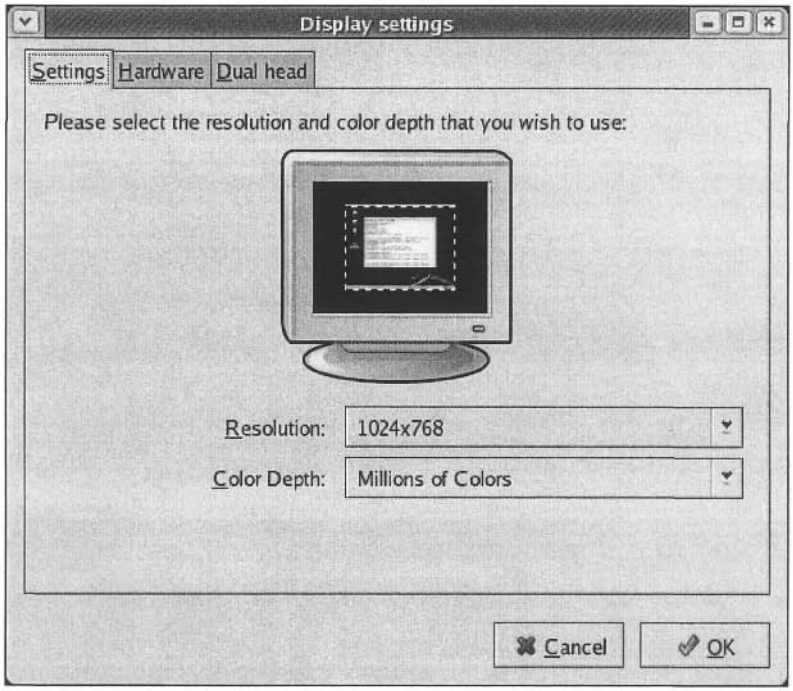

Figure 6.14 The display configuration window.

Working with the GNOME Desktop

Fedora 3 supports two types of desktops: GNOME and KDE. The GNOME desktop is the default desktop and this is the one you have installed. Let's get familiar with this desktop before looking at the command line interface details.

If you have used `My Computer` in Windows XP, you have an equivalent one here (see the `Computer` icon in Figure 6.1). You can launch the Nautilus graphical tool by double-clicking the `Computer` icon. This tool provides an intuitive interface to manage the file system and other resources in your computer. In our example system, this tool shows four icons as we have a USB hard disk drive (PORTABLE) attached to the system (see Figure 6.15).

Browsing the File System

You invoke the Nautilus file manager by selecting `File Browser` from the `Applications` main menu (see Figure 6.2a). The file manager is useful to navigate and manage the file system; you can also use it to browse Web pages and play multimedia content.

This interface looks somewhat similar to the Windows Explorer you are familiar with (see Figure 6.16). The `File` menu allows you to create a new folder or a document, open or browse a folder, and so on. The `Edit` menu supports the standard editing actions such as cut, copy, paste, rename, and so on. In addition, you can use `Preferences` to set the file management

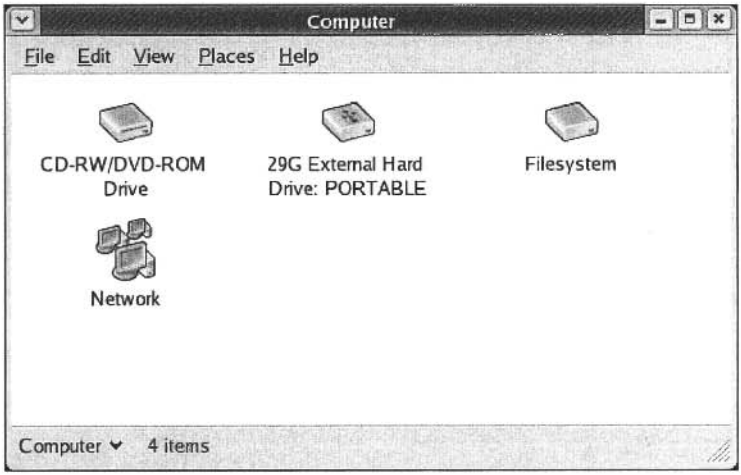

Figure 6.15 The Nautilus file manager can be used to manage resources in your computer system.

preferences. For example, it is possible to select single-click or double-click to activate an item. Similarly, you can specify to run executable files when they are clicked.

You can customize the window by using the `view` menu. This menu lets you specify how the contents of the window should be viewed (as a list, icons, or catalog). In addition, it allows you to specify whether you want the `Location` bar above the main area, `Sidepane` on the lefthand side, and `Status` bar at the bottom of the window. The `Go` menu provides services to visit different locations in your file system, various Web sites, create CDs, and so on. The `Bookmarks` menu can be used to add and edit bookmarks.

You can use the `Location` bar to specify the location you want to go. You could enter here the URL of a Web site or a location in your file system. For example, in Figure 6.16, the location bar shows `/home/sivarama` and the main window shows the contents of this location.

The icons in the toolbar let you move around the directories and Web sites you visited. The `Up` arrow can be used to move up in the directory structure. The `Back` and `Forward` buttons work as in a typical Web browser. The `Reload` button is for refreshing the content. The `Home` button takes you to your home directory (in our example, `/home/sivarama` is the home directory). The `Computer` button displays the content shown in Figure 6.15.

Editing with GEDIT

The `gedit` is a simple text editor that provides functionality somewhat similar to the `Wordpad` in Windows. It can be invoked from the `Accessories` submenu available from the `Applications` main menu as shown in Figure 6.17.

The `gedit` window, shown in Figure 6.18, consists of the following components.

- The `Menubar` at the top of the window contains several pull-down menus that provide commands to open and edit text files. The `File` menu has commands to manipulate files (open, create, save, or save as), print files, page setup, print preview, and quit. The `Edit` menu has the standard edit commands such as undo, redo, cut, paste, copy, and delete. In addition,

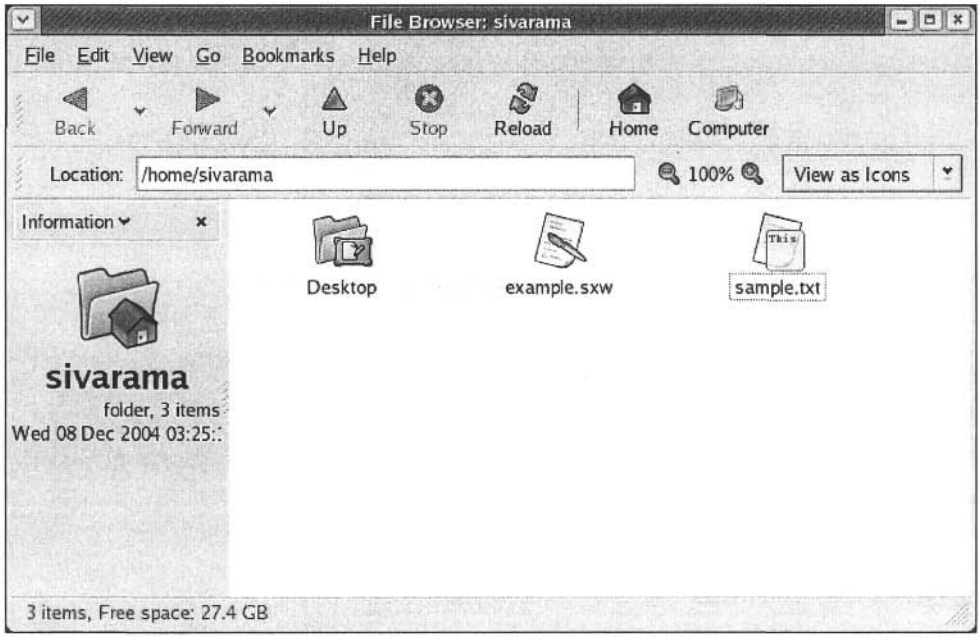

Figure 6.16 The Nautilus file manager can be used to access the file system, Web pages, FTP sites as well as to run applications and create CDs.

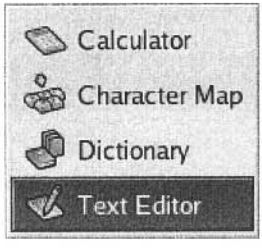

Figure 6.17 The `Accessories` pull-down menu.

you can also set the editor preferences. The `View` menu can be used to customize the toolbars. The `Search` menu provides commands to search and replace text. The spelling check functionality is in the `Tools` menu. The `Documents` menu has save and close commands that affect all the open documents.

- The `Toolbar` provides several icons for some of the common tasks such as creating a new file, opening an existing file, saving a modified file, printing a file, and several editing commands such as undo, redo, cut and so on.
- The `Display area` is for the contents of the file that is being edited.

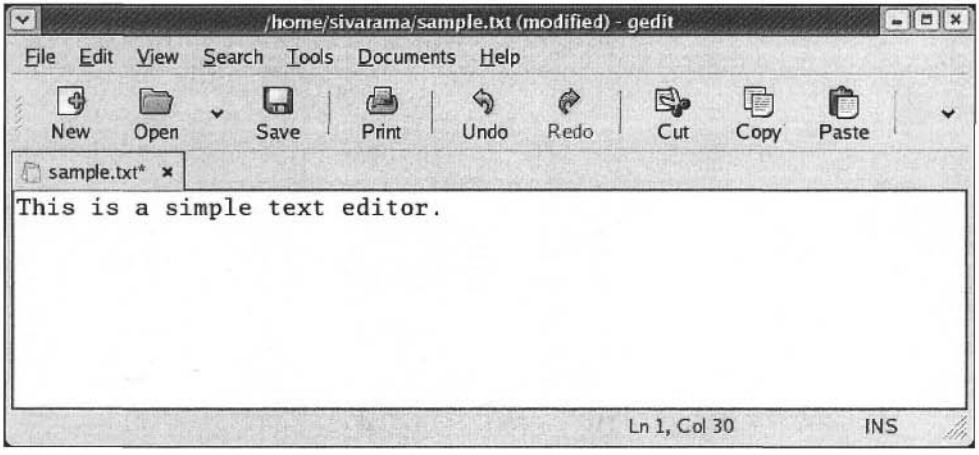

Figure 6.18 The `gedit` window.

- The `Status bar` at the bottom of the window gives information on the current activity. It also provides contextual information on the menu commands. In addition, it displays the cursor position (line number and column number) and the edit mode. The edit mode can be either overwrite (OVR) or insert (INS). In our example, it is in the insert mode. You can switch the edit mode by pressing the `Insert` key.

In Figure 6.18 we didn't show another component—the output window. This window, which appears above the status bar, captures the output of the shell command plugin.

Running Applications

The `Run...` equivalent of Windows is available as the `Run Application...` command in the `Actions` menu (see Figure 6.2b). The run application window, shown in Figure 6.19, allows you to enter the command to execute in the command field. If you want to run a previously executed command, use the arrow button next to the command field to select the command. You can also pick an application from the list displayed by selecting the `Show list...` option.

Select the `Run in terminal` checkbox if you want to run the command in a terminal window. You can use the `Run with file...` button if you want to include a file to the command. For example, if you want to open `sample.txt` file using the `gedit`, type `gedit` in the command field and click the `Run with file...` button. This pops up a window to browse and select the file to be edited.

Office Tools

The Fedora 3 Linux has several office applications that mimic the Microsoft office suite. These applications are available from the `Office` menu as shown in Figure 6.20. The OpenOffice Writer is a word processor application that can read and modify the Microsoft Word documents. It can also save files in several formats including the Word format. A nice feature of this application is that you can password protect the file. This feature, however, is not available for all formats. This

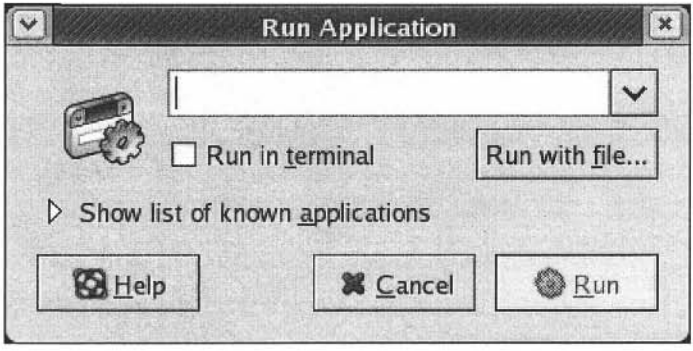

Figure 6.19 The `Run application` window.

Figure 6.20 The office applications software suite.

application allows you to open and process Word documents conveniently without going back to your Windows system.

The OpenOffice Calc is a spreadsheet application that can import and modify Microsoft Excel spreadsheets. As with the OpenOffice Writer, Calc can also save a spreadsheet in the Excel format. When stored in the native format, you can password protect the file.

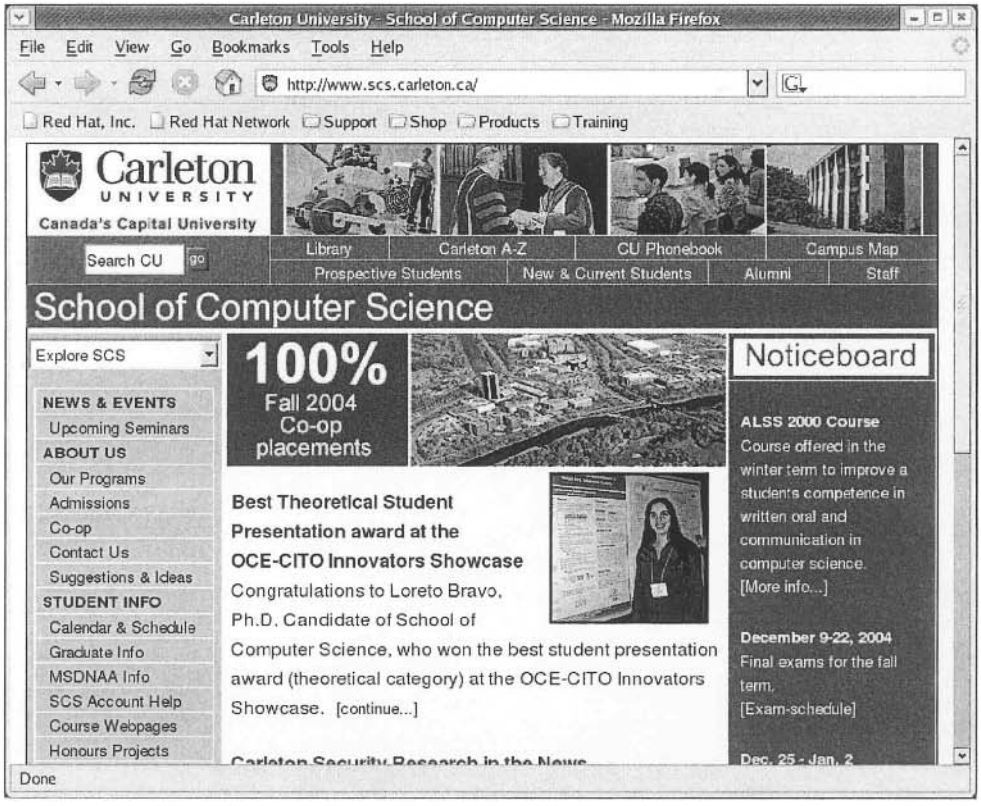

Figure 6.21 The Mozilla Fire Fox Web browser.

Are you wondering if there is a Microsoft PowerPoint equivalent? The answer is the OpenOffice Impress, which lets you create presentations. It can read the PowerPoint files and you can save your presentation in the PowerPoint format as well. As with the last two applications, you can password protect the files stored in the native format.

As shown in Figure 6.20, there are also other applications such as Draw for drawings, Math for equations, Dia for flowcharts, and Project Planner. For example, the Dia application is convenient to draw technical diagrams such as UML diagrams, flowcharts, and so on.

Connecting to the Internet

The applications to connect to the Internet are available under the `Internet` submenu of the `Applications` menu (see Figure 6.2a on page 117). Here we briefly mention two common applications that are often used: a Web browser and an email client. The system installs the default Web browser Mozilla Firefox, which can be invoked either from the Panel or from the Internet submenu. To invoke from the Panel, click the globe-and-mouse icon at the top of the desktop. This Web browser is a derivative of the Netscape Web browser (see Figure 6.21). Because

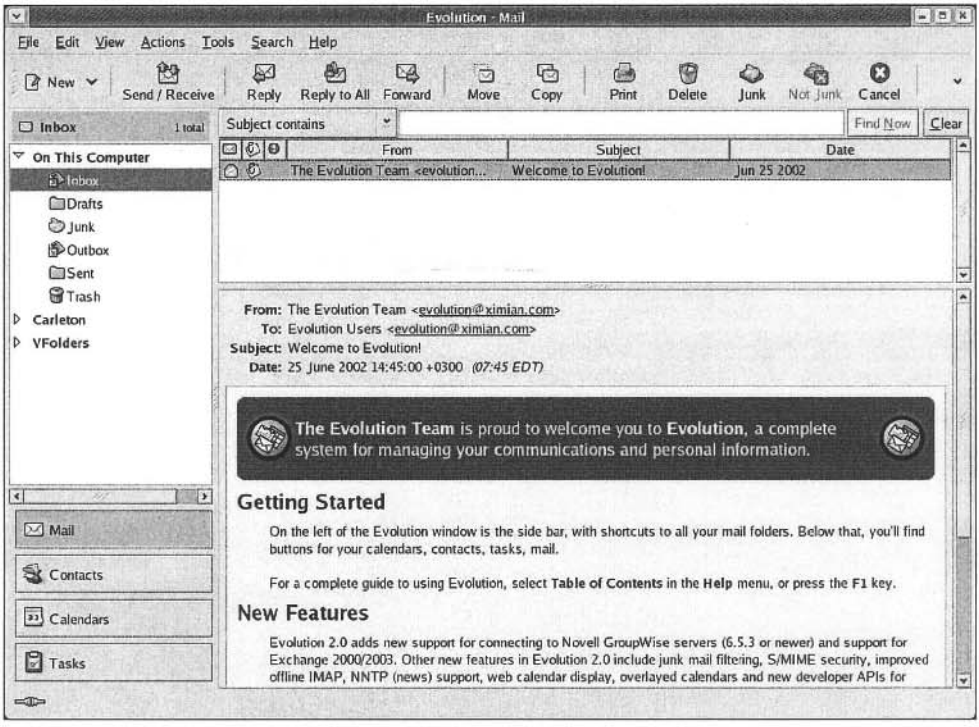

Figure 6.22 The Evolution email client.

of this relationship, you see a lot of similarities between the Mozilla and Netscape browsers. You can also run Firefox on your Windows system by downloading the Windows version from `http://www.mozilla.org`.

The other application we mention here is the Evolution email client to access your email (see Figure 6.22 for its screenshot). Again, you will see similarities between this client and the Netscape's email client. If you are interested, Mozilla has its own version of the email client called Thunderbird. You can download Thunderbird from the Mozilla site mentioned before.

Command Terminal

Once you are familiar with the Linux operating system you are likely to spend more time with the terminal emulator shown in Figure 6.23. This is the equivalent of the Command Prompt in the Windows system. The terminal window can be invoked from the `Applications` menu under `System Tools` submenu. Since this interface is preferred as you get experience with the system and its commands, you may want to add it to the panel for single-click invocation as in Figure 6.1. Note that you can add an application to the panel by right-clicking on it and selecting `Add this launcher to panel` option.

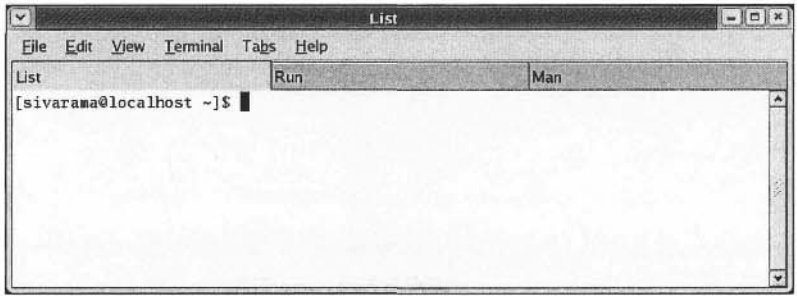

Figure 6.23 The terminal emulator window.

The terminal emulator is much more flexible than the Windows Command Prompt. Each terminal can be defined to have its own profile. A default profile is used to open the initial terminal. A profile defines the various characteristics of the terminal window including the colors, font, scrollbar type, and so on. The `File` menu can be used to open a new terminal, define a new profile, and close a window.

The terminal emulator supports a tabbed window feature that allows multiple terminals to share a single window. For example, Figure 6.23 has three terminals sharing the same window: `List` is used to display a program's source code, `Run` is used to execute the program and check its output, and `Man` is used to look at help information ("man" pages are discussed in the next section). You can easily switch from one terminal to another by selecting the window tab. You can use the `File` menu to close each individual terminal as well as open a tabbed terminal.

The `Edit` menu can be used to edit the current profile, copy and paste, as well as to manage profiles and keyboard shortcuts. The `View` menu is useful to specify the font size (zoom in, zoom out, normal size), whether you want the menubar to appear, or if you want a full screen terminal.

You can use the `terminal` menu to change the profile and title (for example, we used `List` as our title for a terminal in Figure 6.23). In addition, you can use this menu to specify character encoding and reset the state of the terminal if you are having problems with terminals. The `Tabs` menu lists all the tabbed terminals and allows you to navigate through the tabbed terminals.

The terminal window is useful to enter commands to invoke both GUI and non-GUI applications. For example, you can invoke `gedit` to edit `sample.txt` file by entering the following command in the terminal window:

```
gedit sample.txt
```

Here is another example. The command

```
gnome-terminal
```

launches another terminal window. Since the terminal emulator requires commands to specify the work to be done, this interface is often called command-line interface (CLI). Thus, we have two main interfaces to interact with the system: GUI and CLI.

What are the pros and cons of these interfaces? For beginners, GUI is easier to use than CLI because of the point-and-click strategy. The main problem with CLI is the learning curve associated with it—you need to remember various commands and their syntax. In contrast, GUI makes the available options visible to the user. However, it is time consuming as the selection

Table 6.1 Sections of the LINUX manual

Section	Description
1	User commands
2	System calls
3	Library calls
4	Devices
5	File formats
6	Games
7	Miscellaneous
8	System administration tools

of these options often requires traversing a hierarchy of menus. In particular, if you know which command to use and its syntax, it is faster to type the command than using menus. This is typically the case with experienced users. As we shall see in the rest of the chapter, it is fairly straightforward to develop simple scripts that combine several commands to accomplish a complex task. For example, you can feed the output of one command as input to another command. In general, experienced users tend to prefer CLI whereas new users prefer GUI for its ease of use.

In the remainder of the chapter, we focus on the command line interface and look at various commands you can use in the terminal window.

Getting Help

Help on the Linux commands is particularly needed with the command line interface. The Linux manual pages ("man pages") provide information on the various commands. These man pages are divided into several sections as shown in Table 6.1. Most of the commands executed by the users are placed in Section 1. The next section gives information on the system calls provided by the kernel. Section 3 describes the language library functions in C, FORTRAN, and so on. Special files in the `/dev` directory are described in Section 4. Section 5 describes the file formats and protocols. The next section gives information on the games available. Section 7 describes conventions, character set standards, file system layout, and other miscellaneous items. The system administrative commands, described in Section 8, can only be used by the root or superuser.

The `man` command can be used to access the man pages. Its syntax is simple—just type `man` and the command name. For example, to get information on `gedit`, you can enter the `man` command as

```
man gedit
```

Of course, you can use

```
man man
```

to get information on how to use the `man` command itself. This command displays the information shown in Figure 6.24. You can use the `Spacebar` key to scroll forward through the document and the `b` key to scroll backwards (up and down arrow keys also work). You can use the `Enter` key to scroll line by line. If you want to quit the document, press `q` key.

```
sivarama@localhost:~
File  Edit  View  Terminal  Tabs  Help
man(1)                                                          man(1)

NAME
       man - format and display the on-line manual pages
       manpath - determine user's search path for man pages

SYNOPSIS
       man  [-acdfFhkKtwW]  [--path]  [-m system] [-p string] [-C config_file]
       [-M pathlist] [-P pager] [-S section_list] [section] name ...

DESCRIPTION
       man formats and displays the on-line manual pages.  If you specify sec-
       tion,  man  only looks in that section of the manual.  name is normally
       the name of the manual page, which is typically the name of a  command,
       function,  or  file.  However,  if  name contains a slash (/) then man
       interprets it as a file specification, so that you can do  man  ./foo.5
       or even man /cd/foo/bar.1.gz.

       See  below  for  a  description  of where man looks for the manual page
       files.

OPTIONS
       -C  config_file
:
```

Figure 6.24 Manual page entry for the `man` command.

Some commands appear in more than one section. For example, the `passwd` command can be used by the user to change his/her account password. Thus, information on this command is included in Section 1. There is also another entry for `passwd` in Section 5. This entry describes the `/etc/passwd` file maintained by the system. To clarify this ambiguity, you can include the section number in the `man` command. For example, to get information on the `passwd` file in Section 5, we enter the `man` command as

```
man 5 passwd
```

All man pages follow a very simple format. Often, the description given is very cryptic. As a new user, you may not find the man pages all that helpful. But as you get used to the various commands, you will find man pages useful as a reference document that gives concise information on the command syntax and the various options available.

Some General-Purpose Commands

In this section, we introduce some of the common commands that are useful for a beginner. Our description of these commands is rather brief. Of course, you can use the `man` command to get more information on these commands.

Before we proceed further, we need to introduce the shell. For our purposes, the shell can be thought of as the user's interface to the operating system. It acts as the command line interpreter. Several popular shells including the Bourne shell (`sh`), C-shell (`csh`), Korn shell (`ksh`), and Bourne Again shell (`bash`) are available. Since `bash` is the preferred shell in the Linux systems, we assume that you are using this shell. Furthermore, `bash` is the default shell in Fedora 3.

When you type a command, you don't have to specify the location of its executable program. The shell searches for the program associated with the command among the locations specified by a special environment variable PATH. This variable essentially defines your search path. Later we show how you can look at the contents of your PATH variable.

Entering and Editing Commands

Command Line Completion The bash shell provides a command line completion feature that helps us greatly. Using this feature you don't need to type the complete command—just enough for the shell to uniquely identify the command. The shell will complete the command if you press the tab key. For example, when we type

```
ged<TAB>
```

the shell completes the command name as gedit. Suppose we have a file sample.txt in our directory. If there is no other file that starts with s, we can save a few key strokes by typing

```
ged<TAB> s<TAB>
```

to enter the command

```
gedit sample.txt
```

Recalling a Command The shell maintains a record of all your commands in a history file. Every time you enter a command, the complete command is stored in this file. This list is maintained in the reverse chronological order (i.e., with the most recent command at the head of the list). You can take a peek into this list by using the history command. When this command is used without any options, it gives the full list of commands from the history file. However, if you want to see the most recent n commands, enter history n. For example, the command

```
history 4
```

display the last four commands including the current history command:

```
93 man man
94 man 5 passwd
95 gedit sample.txt
96 history 4
```

Each command is displayed with a line number in the history file. You can use these line numbers to execute the corresponding command. For example, to run the man 5 passwd command, you type !94 at the prompt. You can run the last command by typing !!. To run a command that contains a string, just type ?string? where ? is a wildcard (that is, it matches zero or more characters). For example, given the previous history, the command

```
!dit
```

results in the following error:

```
bash: !dit: event not found
```

However, by modifying the command to

```
!?dit
```

the shell successfully executes the command

```
gedit sample.txt
```

You can also access the commands from the history list with the keys. Here are some examples:

- Use the up (↑) and down (↓) arrow keys to navigate the history list. Alternatively, use `ctrl-p` to go to the previous command and `ctrl-n` to go to the next command.
- You can use `ctrl-r` to incrementally reverse search the command history. Once you press `ctrl-r`, you are prompted for a search string. As you enter the search string, a matching command appears. This is the reason for calling it "incremental search" as it does not wait for the complete string to be typed.

Sometimes you don't want to execute the command as is. You may want to modify it before running it again. To do this, you need to edit the command. This is what we are going to discuss next.

Editing Commands The shell provides several shortcuts for editing a command line. Use the left (←) and right (→) arrow keys to move cursor on your command line. You can also use `Ctrl-b` to move cursor back by one character and `Ctrl-f` to move it forward by one character. When you enter text, it is inserted at the current cursor position. The `backspace` key erases the character before the cursor. For example, suppose you typed the following command:

```
gedit samples.txt
```

Then you notice that you entered the wrong file name (`samples` instead of `sample`). To delete the `s`, use the left arrow key to move the cursor to the period and press the `backspace` key. Then you can simply press `Enter` to execute the command. Table 6.2 gives a list of keystrokes that allow you to navigate and edit command lines.

Changing Password

You have seen how your password can be changed by using the `Applications` main menu from the GNOME desktop. You can also change your password from the command line interface. To change your current account password, just type the command `passwd`. It first asks for your current password and then prompts you to enter the new password twice. If you are the root, you can specify the user name. Thus, as the root, you can change the password of any account in the system.

Locating a Program

Two commands are available to find the location of a program. The `which` command finds the location of a file within the directories listed in your `PATH` variable. The `whereis` command can find the files that are located in the standard directories. It is not restricted searching only the directories listed in your `PATH` variable.

Miscellaneous Commands

If you want to find out the users logged into your system, use the `who` command. The `uname` command gives the operating system running on your system. The `echo` command displays a line of text. For example, the command

Table 6.2 Some of the keystrokes for navigating and editing command lines

Keystroke	Action
`Ctrl-b`	Move cursor back by one character
`Ctrl-f`	Move cursor forward by one character
`Alt-b`	Move cursor back by one word
`Alt-f`	Move cursor forward by one word
`Ctrl-a`	Move cursor to the beginning of the command line
`Ctrl-e`	Move cursor to the end of the command line
`Ctrl-l`	Clear the screen and leave the command line at the top of the screen
`Ctrl-d`	Delete the character at the cursor position
`Backspace`	Delete the character before the cursor position
`Ctrl-t`	Transpose the current and previous characters

```
echo $PATH
```

can be used to see the directories listed in your `PATH` variable.

The `ps` command can be used to see the processes running on the system. By default, it gives information about all processes with the same user id as the current user. It displays the process id (PID), the terminal associated with the process (TTY), the cumulative CPU time (TIME), and the command name (CMD). You can also specify several options to get more detailed information.

The last command we discuss here allows you to become super user (i.e., root) without explicitly logging in as the root. Often, when you are in your system user account, you may need to do a small administrative chore that requires root privileges. Instead of logging out of your current account and logging in as the root, the `su` command allows you to assume the root identity. For example, you can use the `su` command as shown below:

```
$ su -
Password: ********
#
```

The `su` command asks for the root password. If you give the correct password, it changes the prompt from `$` to `#` to indicate that you are now the root. Then, for example, you can edit the `fstab` file. Recall from Chapter 5 that only the root can modify this file. To edit the file, you can use the following command:

```
gedit /etc/fstab
```

To leave the super user shell and return to your previous shell, use either `exit` or `ctrl-d`. As usual, you can get more details on this command by using the `man` command.

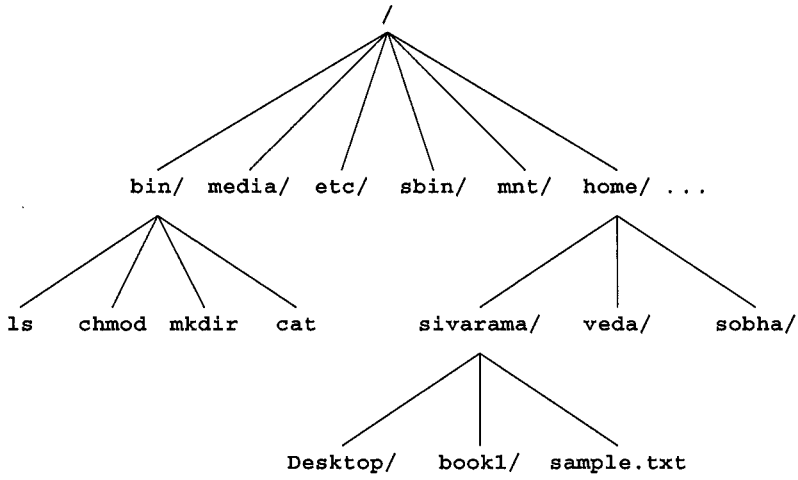

Figure 6.25 The file system is a hierarchy of directories. The root directory is represented by a slash (/).

File System

The Fedora 3 file system provides the necessary structure to store information. While the file system supports several types of files, here we focus on ordinary files and directories. The file system is organized as a hierarchy of directories (similar to that in Windows). Since you are familiar with hierarchical file systems, we briefly present details of the Fedora file system.

The root directory of the file system is represented by a slash / as shown in Figure 6.25. At the next level, you see a set of common directories such as `bin/`, `etc/`, `home/`, and so on. The `/home` directory contains the user directories. In the example, we show three user directories: `sivarama/`, `veda/`, and `sobha/`. Each of these directories may have other directories or files. Figure 6.25 shows the subdirectories under the `sivarama` directory.

Path Names

You can uniquely specify the files and directories in the file system by its path. A path is simply the list of directories from the root directory (/). For example, the path of `sample.txt` in Figure 6.25 is

```
/home/sivarama/sample.txt
```

This is called the *absolute path* because it specifies where the `sample.txt` file is within the file system. Absolute path always begins with the root directory (/). In contrast, a relative path specifies the path relative to your current directory. We discuss later how you can specify a relative path.

You can always find your home directory by displaying the value of `HOME` environment variable as in the following command:

```
$ echo $HOME
/home/sivarama
```

In the command line, tilde (~) represents your home directory. For example, you can specify the path of `sample.txt` as

```
~/sample.txt
```

Next we look at a few directory commands.

Directory Commands

To know your current directory, use the `pwd` command. For example, you will see

```
$ pwd
/home/sivarama
```

if you are currently in the `sivarama` directory. Use the `cd` command to change the current directory. The current directory is represented by a dot (`.`) and the parent of the current directory by two dots (`..`). For example `cd ..` makes the parent directory as your current directory. Here is another example. If your current directory is `bin/`, you can refer to the `sample.txt` file as

```
../home/sivarama/sample.txt
```

This is a *relative path* as opposed to the absolute path we had given before.

Next we look at some commands to navigate and access the directories and files. The `ls` command lists the contents of a directory. If you don't specify a directory, the current directory is the default.

To create a new directory, you can use the `mkdir` (make directory) command. Here is an example.

```
mkdir courses
```

creates the `courses` directory in your current directory. If you want to remove an empty directory, you can do so with the `rmdir` (remove directory) command. For example, the command

```
rmdir courses
```

deletes the directory we just created. If the directory specified is not *empty*, `rmdir` will not delete the directory. To delete a non-empty directory, you can first empty the directory by deleting its contents (files and other sub-directories) and then delete the directory. There is also a convenient way of deleting a non-empty directory by using the `rm` command, which is discussed in the next section.

File Commands

Several commands are available to view the contents of files. The `cat` (concatenate) command displays the contents of the specified files. You can specify more than one file. For example, the command

```
cat sample.txt test
```

displays the contents of the files (`sample.txt`) and `test`.

If the file is large, you may want to control how its contents are displayed. There are several commands that allow you controlled view of the contents. The `more` command displays the

contents of a file one screen at a time. To scroll the screen by a single line, press the `Enter` key. To scroll to the next screen, use the `Spacebar` key.

A problem with `more` is that it allows only forward movement—you cannot go back. This is remedied by the `less` command. This command allows both forward and backward movement. In addition, the `less` command doesn't wait to read the whole file before displaying the contents. Thus, it is faster if the file is very large. For large files, you can also use `head` to view the first part of the file and `tail` to view the last part. You can use the `man` command to find out more details on these commands.

The `cp` (copy) command copies files and has the following format:

```
cp from to
```

A path can be specified for `from` and `to`. If no path is given, the current directory is the default. Here is an example that copies `sample.txt` to `test`.

```
cp sample.txt test
```

Instead of copying a file, sometimes you may want to move a file. The `mv` (move) command performs this job. For example, the command

```
mv test test1
```

moves the file `test` to `test1`. This operation is effectively renaming the file. Thus, you can use `mv` to move and rename files. To delete a file, use `rm` (remove) as in the following example:

```
rm test
```

This command deletes the `test` file. To specify a group of files, you can use wildcards: `*` to match zero or more characters, and `?` to match a single character. The command

```
rm *
```

deletes all the files in the current directory. It does not delete the directories. For that, you need to use the `-r` option mentioned below.

This last command (`rm *`) can be quite dangerous—it silently deletes all the files. If you want the delete process to be interactive, use the `-i` (interactive) option. With this option, the `rm` command asks whether to delete a file; depending on what you say (`y` or `n`), the process proceeds.

The `mv` command works on directories as well as files. However, `cp` and `rm` cannot be used on a directory without options. To work on the directories, you have to use the `-r` (recursive) option. As an example, if you want to remove a non-empty directory (say, `courses`), you can use

```
rm -r courses
```

Similarly, if you want copy a directory, the `cp` command with `-r` would do the job.

Access Permissions

Linux provides a sophisticated security mechanism to control access to individual files and directories. Each file and directory has certain access permissions that indicate who can access and in what mode (read-only, read/write, and so on). With these permissions the system can protect,

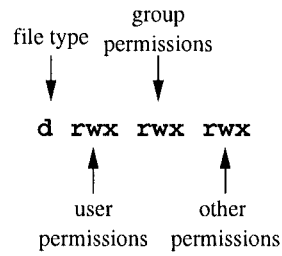

Figure 6.26 Details of the access permissions.

for example, users from accessing other user's files. However, sometimes, we do need to share files. For example, a group of software developers working on a project may need to share each other's files. If we strictly do not allow any sharing of files, the group members would have to share passwords so that one can login as another user to access the files, or use explicit copying of files between the user accounts.

To avoid these problems, each Linux user belongs to a group of users as determined by the system administrator when the account was created. You can verify this information on your system by going to the `Applications→System Settings→Users and Groups` menu. If you are not logged in as root, it will ask you for the root password and then opens a tabbed window. The `Users` tabbed window gives information on the user accounts in the system. If you click the `Groups` window, it gives the group information: group name to identify the group, group id, and the group members. In the toolbar of this window, you see icons to add groups and to modify group membership. The group id is an integer. Fedora reserves group ids less than 500 for system groups. Thus, for user groups, group id starts at 500.

Typically, a user belongs to a single group. However, a user may belong to multiple groups. From the access permission point of view, there are three types of users: owner, group, and others. The last group represents everyone else.

Linux, like the UNIX systems, associates three types of access permissions to files and directories in the file system: read (r), write (w), and execute (x). As the names indicate, the read permission allows read access and the write permission allows writing into the file or directory. The execute permission is required to execute a file and, for obvious reasons, should be used with binary and script files that contain executable code or commands.

The Linux system uses nine bits to keep the access permissions as there are three types of users, each of which can have three types of permissions. The `ls` command with `-l` (long) option gives the access permission information, as in the following example.

```
$ ls -l
drwxr-xr-x 2 sivarama project1 4096 Dec 24 13:56 Desktop
-rw-rw-r-- 1 sivarama project1 5610 Dec 30 12:53 sample.txt
-rw-r--r-- 1 sivarama project1 5610 Dec 30 12:53 test
```

Each line in this list contains the following information (from left to right):

- The first column displays the permissions for each file/directory. Figure 6.26 shows details of this column. The first letter before the nine permission letters identifies the file type. In

our example, the first line with d identifies that Desktop is a directory. A dash (-) is used for a regular file as in lines 2 and 3. The next nine letters are divided into three fields.

- The first three letters give information on the permissions for the user (that is, the owner).
- The second set of three letters indicates the permissions for the user group.
- The last three letters represent the permissions for everyone else.

If a permission is off, it is indicated by a dash (-); otherwise, the corresponding letter is used.

- The integer in the second column gives the number of links. For example, if you give permission to share your file to another user in your group, a link to this file will be placed for the other user. For most files, the link count is 1.
- The next column (sivarama in our example) gives the owner of the file. This is usually the person who created the file.
- The next entry (project1 here) is the group that has the group access to the file/directory.
- The next number gives the size of the file in bytes (characters). In our example, the size of sample.txt file is 5610 characters long.
- The date and time stamp of the file (when it was created or last modified) are given next.
- The last column gives the name of the file/directory.

In our example, the first line indicates that the owner can read, write, and execute the Desktop directory. The group and others have read and execute permissions but not the write permission.

Note that the read permission on a directory allows you to read its contents. The write permission for a directory means you can write into the directory (e.g., create a subdirectory in it). What does execute permission on a directory mean? The execute permission for a directory is redefined from its file definition. If a directory has the execute permission, it allows you to use the cd command to make it your current directory and/or look at the files in that directory. However, it will not allow you to read from or write into the directory. For example, the ls command will not list the files in the directory if you don't have the execute permission. However, if you know the name of a file, you can get details about it or look at its contents.

In the second line, the dash in the file type suggests that sample.txt is a regular file. Of course, we know that it is a text file. Therefore, it does not make sense to use execute permissions. On this file, the owner and the group have read and write permissions whereas others have only the read permission. From the third line in this example, we can gather that test is a regular file. In addition, only the owner has the read/write access. All the others can only read this file.

Setting Access Permissions

The chmod (change mode) command changes the access permissions. The owner of a file can determine who can access the file. There are two ways of specifying the access permissions: in octal or symbolic mode.

In the octal mode, you convert the three permission bits for each user type into an octal number. In this method, the 9-bit permissions can range from 000 to 777. The permissions are represented in the octal notation by writing a 1 for the permission bit that is on and 0 for the off bit. Following this procedure, the Desktop directory permissions from our previous example (rwx r-x r-x) are represented in the octal notation as 111 101 101, which is 755 in octal. Similarly, the permissions for the sample.txt file rw-rw-r-- can be expressed in octal as 664. The octal

Table 6.3 Values for the symbolic mode fields

Field	Value	Description
Who		
	u	User
	g	Owner's group
	o	All others not in the group
	a	All users
Operator		
	+	Add the permission
	–	Remove the permission
	=	Set the permission
Permission		
	r	Set the read permission
	w	Set the write permission
	x	Set the execute permission
	u	Set to the file owner's current permissions
	g	Set to the file group's current permissions
	o	Set to the file other's current permissions

string `644` expresses the permissions (`rw-r--r--`) for the `test` files in our example. Since you specify the actual permissions, this mode is also called the absolute mode.

In the symbolic mode, mode control words are used to express the access privileges, mostly relative to the current privileges. For example, you may add the write privilege to your group. Mode control words consist of three fields and take the form `<who><operator><permission>`. These fields can take the values shown in Table 6.3.

The format of `chmod` is

```
chmod access-mode file-list
```

The `access-mode` can be expressed in the octal or symbolic mode. Here are some examples. The command

```
chmod 660 test
```

changes the permissions to the `test` file as `rw- rw- ---`. This means that only the owner and his/her group can read or write `test`; all others cannot access the file. If you use the `*` wildcard, permissions for all the files and directories are changed. You can also use other metacharacters like `?` to specify `file-list`. If you want to allow others to read the `test` file, you can do so by the following command:

```
chmod o+r test
```

To change the permissions of all the files in a directory and in all of its subdirectories, use the `-R` (recursive) option. For example, if `temp` is a directory, the command

```
chmod -R 764 temp
```

recursively changes the permissions for all the files and directories in `temp` and its subdirectories.

Redirection

In Linux, three standard files are automatically opened for you. These default files are used by your command to read its input and to send its output and error messages. The `stdin` (standard input) file supplies the data needed by the command. This file is mapped to your keyboard. The `stdout` (standard output) file receives the program's output. The error messages are directed to `stderr` (standard error) file. These last two standard files are mapped to the terminal running the command. This default association with files can be changed using redirection operators.

To redirect output of a command to a file, use the > (greater-than) symbol as shown here:

```
command > out-file
```

As an example, consider the following command:

```
ls -l > list
```

This command sends the output to the `list` file. Here is a simple way to create a text file without using a text editor.

```
cat > simple.txt
```

Since we did not specify the file in the `cat` command, it expects the input to come from the default input file (`stdin`). The output of this command is redirected to the `simple.txt` file. You can terminate the input by typing `Ctrl-d`.

The redirect the input of a command, you can use the < (less-than) symbol as shown below:

```
command < in-file
```

Before giving an example of the input redirection, let's first look at a new command. The word count (`wc`) command can be used to print the line, word, and byte counts of a file. In fact, you can specify more than one file on the command line. If no file is specified on the command line, it reads from the standard input file `stdin`. For example, the following command

```
$ wc < simple.txt
 22  191  1327
```

uses input redirection to print the three counts for the `simple.txt` file. The three numbers give the line count (22), word count (191), and byte count (1327).

Both input and output redirections can be used in a single command. For example, if you want to store the output of the previous command in a file (say, `count`), the following command will do the job.

```
$ wc < simple.txt > count
```

When we use the output redirection, if the output file already exists, the contents are erased and the command's output is placed in the file. Instead, if you want the command output to be appended to the file contents, use the append output symbol (>>). The command sequence

```
$ cat < sample1.txt > test
$ cat < sample2.txt >> test
```

copies the contents of the files `sample1.txt` and `sample2.txt` into the `test` file.

Before closing this section, we note that the output redirect command (>) overwrites the file with the command output. This has the unfortunate side effect of overwriting files by accident (for example, if a wrong file name is given). You can set the `noclobber` variable to avoid this problem. You can set this variable by using the `set` command as shown below:

```
set -o noclobber
```

When the `noclobber` variable is set, you can force overwriting a file by using a pipe symbol (discussed next) after the redirection (>|) or append symbol ((>>|). To unset the `noclobber` variable, you can use the following command:

```
set +o noclobber
```

This command allows overwriting of files as before.

Pipes

As we have seen, the Linux system provides several commands. These commands can be treated as the basic building blocks. While a simple task can be done by using a single command, we may need several commands to accomplish a complicated task. We may have to feed the output of one command as input to another to accomplish the task. Of course, we can store the output of the first command in a temporary file and use this file as the input to the next command. The shell provides the pipe operator (|) to achieve this without any temporary files. The syntax is

```
command1 | command2
```

The output of the first command (`command1`) is fed as input to the second command (`command2`). The output of `command2` is the final output. Of course, we can connect several commands using the pipes:

```
command1 | command2 | command3 | command4 | command5
```

Here is an example that uses a pipe to sort the output of the `ls` command.

```
ls | sort
```

As another example, let's look at a different way to get the three counts (line, word, and byte) for the `simple.txt` file. We can use the `cat` and `wc` commands connected by a pipe as shown below:

```
cat simple.txt | wc
```

`grep` is another useful command that allows you to find a string in one or more files. For example, the command

```
ls -l | grep simple
```

displays the lines in the output of `ls -l` command that contain the string `simple`.

We have briefly introduced several basic commands. However, this is only a small sample of the commands that are available. If you are intrigued by this introduction, you can get more information from several online resources. You can also visit your favorite bookstore for books dedicated to the Linux operating system.

Editing Files with Vim

Two text editors, `vi` and `emacs`, are commonly used in the Linux system. The Fedora system you installed has an improved version of `vi` called `vim` (vi improved). In this section we briefly describe the `vim` text editor.

You can invoke `vim` to edit a file (say, `simple.txt`) by typing `vim simple.txt`. The `vim` editor works in two modes:

- *Command Mode:* In this mode, the input is interpreted as a command to the editor. Some examples of these commands are: save the file, exit `vim`, move the cursor, delete and search for text.
- *Input Mode:* This mode allows you to input text. When you start `vim`, it is in the command mode. You can switch to the input mode by several commands. For example, the `i` command switches it to the input mode.

If the editor is in the insert mode, the bottom line indicates this (see Figure 6.27). The empty lines are indicated with the tilde characters (~). You can exit `vim` in one of several ways as shown here:

`ZZ`	—	Save the buffer and quit
`:x`	—	Save the buffer and quit (same as `ZZ`)
`:wq`	—	Save the buffer and quit (same as `ZZ`)
`:q`	—	Quit (works only if you don't have any unsaved changes)
`:q!`	—	Quit without saving the changes in the buffer

The first three commands perform the same action—write the changes in the buffer and quit. The `vim` editor has the following commands to write the buffer.

`:w`	—	Save the buffer to the current file
`:w filename`	—	Save the buffer to `filename`; it does not overwrite if the file exists
`:w! filename`	—	Save the buffer to `filename`; it overwrites if the file exists

The first command saves the buffer to the current file that `vim` is editing. The second and the third commands allow you to write the buffer to a new file.

You can move the cursor using the four arrow keys. You can also use the `h`, `j`, `k`, and `l` keys to move the cursor left, down, up, and right, respectively. In addition, the following commands are available to move the cursor:

`G`	—	Move cursor to the first line of the file
`1G`	—	Move cursor to the last line of the file
`0` (zero)	—	Move cursor to the first character of the current line
`$`	—	Move cursor to the last character of the current line
`w`	—	Move cursor forward by one word
`b`	—	Move cursor backward by one word

Note that you have to be in the command mode to issue commands to `vim`. Also in the command mode, you can do simple text editing using the following commands:

```
sivarama@localhost:~
File  Edit  View  Terminal  Tabs  Help
This text is entered using the VIM editor.
This editor operates intwo modes:
command mode and insert mode.
~
~
~
~
~
~
~
~
~
~
~
~
~
~
~
~
~
~
~
-- INSERT --                                    3,30          All
```

Figure 6.27 The VIM editor in the input mode.

`x`	—	Delete the character *at* the cursor
`X`	—	Delete the character *before* the cursor
`dd`	—	Delete the line at the cursor
`u`	—	Undo the most recent change
`r`	—	Replace the character at the cursor by the character typed next

The replace command places `vim` in the Input mode and the character you type after the `r` command replaces the current character. After that the editor returns to the Command mode.

In addition to the replace command, you can put `vim` in the Input mode by any of the following commands: insert (`i`), append (`a`), or open (`o`). When you are done entering the text, press the `Esc` (Escape) key to return to the command mode. The insert command places `vim` in the Input mode and the text entered will go before the cursor. The append command is similar to the `i` command except that it places the text after the cursor. The open command opens a blank line and places the cursor at the beginning of the blank line.

To search forward, you can use the `/` command. For example, `/text` looks for the string `text` in the forward direction (that is, from the current cursor position to the end of the file). To do the reverse search, use `?` in place of the slash. For example, `?text` searches backward from the current cursor position to the beginning of the file.

The last command we discuss here is the substitute (`s`) command. It lets you replace text conveniently. The format of this command is

```
:[range]s/old_string/new_string/option
```

The `old_string` is substituted by `new_string` in the range of lines specified by the optional `range`. The range is specified in the format "`from,to`". If no range is given in the command, the current line is the default. The `option` is a modifier to the command. Usually, `g` is used for global substitutions. The following examples give an idea of how this command works. The command

```
:s/test/text
```

replaces the first occurrence of `test` in the current line by `text`. If you want to replace all occurrences in the current line, use the `g` option as in the following command:

```
:s/test/text/g
```

The command

```
:1,10s/test/text
```

replaces the first occurrence of `test` in each of the ten lines specified (i.e., lines 1 through 10) by `text`. To change all occurrences in these ten lines, add the `g` option to the previous command.

We have covered only the basic commands available in the `vim` editor. It has several very powerful and sophisticated commands. If you decide to use `vim` you can look at these advanced commands after you gain some degree of familiarity with the editor.

Summary

This chapter introduced the basics of the Linux system. If you are new to Linux, the material presented here should get you started with the Fedora 3 system you have installed. We started the chapter with a discussion of the graphical user interface provided by the system. Specifically, we focused on the GNOME desktop. For new users, GUI provides an easy, point-and-click interface. However, as you get familiar with the system, the command line interface tends to be more efficient. We have provided the basics of the command line interface and discussed several basic commands that are useful. The material presented in this chapter is sufficient to proceed with our main goal of learning assembly language programming using the Linux tools.

PART IV

NASM

7

Installing and Using NASM

In this chapter, we introduce the necessary mechanisms to write and execute assembly language programs. We begin by taking a look at the structure of assembly language programs we use in this book. To make the task of writing assembly language programs easier, we provide a simple template to structure the stand-alone assembly language programs used in this book.

Unlike the high-level languages, assembly language does not provide a convenient mechanism to do input and output. To overcome this deficiency, we have developed a set of I/O routines to facilitate character, string, and numeric input and output. These routines are described after introducing the assembly language template.

Once we have written an assembly language program, we have to transform it into its executable form. Typically, this takes two steps: we use an assembler to translate the source program into what is called an object program and then use a linker to transform the object program into an executable version. We give details of these steps in the "Assembling and Linking" section. However, this section uses an assembly language program example. Since we have not yet discussed the assembly language, you may want to skip this section on the first reading and come back to it after you have read Chapters 9 and 10, which provide an overview of the assembly language.

Introduction

Writing an assembly language program is a complicated task, particularly for a beginner. We make this daunting task simple by hiding those details that are irrelevant. A typical assembly language program consists of three parts. The code part of the program defines the program's functionality by a sequence of assembly language instructions. The code part of the program, after translating it to the machine language code, is placed in the code segment. The data part reserves memory space for the program's data. The data part of the program is mapped to the data segment. Finally, we also need the stack data structure, which is mapped to the stack segment. The stack serves two main purposes: it provides temporary storage, and acts as the medium to pass parameters in procedure calls. We introduce a template for writing stand-alone assembly language programs, which are written completely in the assembly language.

We rarely write programs that do not input and/or output data. High-level languages provide facilities to input and output data. For example, C provides the `scanf` and `printf` functions to input and output data, respectively. Typically, high-level languages can read numeric data (integers, floating-point numbers), characters, and strings.

Assembly language, however, does not provide a convenient mechanism to input and output data. The operating system provides some basic services to read and write data, but these are fairly limited. For example, there is no function to read an integer from the user.

In order to facilitate I/O in assembly language programs, we have developed a set of I/O routines to read and display characters, strings, and signed integers. Each I/O routine call looks like an assembly language instruction. This similarity is achieved by using macros. Each macro call typically expands to several assembly language statements and includes a call to an appropriate procedure. These macros are all defined in the `io.mac` file and the assembled procedures are in the `io.obj` file. We use an example program to illustrate the use of these I/O routines as well as the assembly language template.

Installing NASM

NASM, which stands for netwide assembler, is a portable, public-domain, IA-32 assembler that can generate a variety of object file formats. In this chapter, we restrict our discussion to a Linux system running on an Intel PC.

The accompanying CD-ROM has a copy of NASM. If you followed the Linux installation directions given in Chapter 5, it is already installed. However, if you did not install NASM as part of the Linux installation, or if you want the latest version, this section explains how you can install it.

The latest version of NASM can be downloaded from several sources (see the book's Web page for details). The NASM manual has clear instructions on how to install NASM under Linux. (To get the NASM manual, see the "Web Resources" section at the end of this chapter.) Here is a summary extracted from this manual:

1. Download the Linux source archive `nasm-X.XX.tar.gz`, where `X.XX` is the NASM version number in the archive.
2. Unpack the archive into a directory, which creates a subdirectory `nasm-X.XX`.
3. `cd` to `nasm-X.XX` and type `./configure`. This shell script will find the best C compiler to use and set up Makefiles accordingly.
4. Type `make` to build the `nasm` and `ndisasm` binaries.
5. Type `make install` to install `nasm` and `ndisasm` in `/usr/local/bin` and to install the `man` pages.

This should install NASM on your system. Alternatively, you can use an RPM distribution for the Fedora Linux. This version is simpler to install—just double-click the RPM file.

Generating the Executable File

The NASM assembler supports several object file formats including ELF (execute and link format) used by Linux. The assembling and linking process is simple. For example, to assemble the `sample.asm` program, we use

```
;brief title of program                    file name
;
;           Objectives:
;               Inputs:
;              Outputs:
;
%include  "io.mac"

.DATA
 (initialized data go here)

.UDATA
 (uninitialized data go here)

.CODE
        .STARTUP                ; setup
          . . .
          . . .
    (code goes here)
          . . .
          . . .
        .EXIT                   ; returns control
```

Figure 7.1 Template for the assembly language programs used in the book.

```
nasm -f elf sample.asm
```

This generates the `sample.o` object file. To generate the executable file `sample`, we have to link this file with our I/O routines. This is done by

```
ld -s -o sample sample.o io.o
```

Note that `nasm` requires the `io.mac` file and `ld` needs the `io.o` file. Make sure that you have these two files in your current directory. We give details about the assembly process towards the end of the chapter.

Assembly Language Template

To simplify writing assembly language programs, we use the template shown in Figure 7.1. We include the `io.mac` file by using the `%include` directive. This directive allows us to include the contents of `io.mac` in the assembly language program. If you had used other assemblers like TASM or MASM, it is important to note that NASM is case-sensitive.

The data part is split into two: the `.DATA` macro is used for initialized data and the `.UDATA` for uninitialized data. The code part is identified by the `.CODE` macro. The `.STARTUP` macro handles the code for setup. The `.EXIT` macro returns control to the operating system.

Now let us dissect the statements in this template. This template consists of two types of statements: executable instructions and assembler directives. Executable instructions generate machine code for the processor to execute when the program is run. Assembler directives, on the other hand, are meant only for the assembler. They provide information to the assembler on

the various aspects of the assembly process. In this book, all assembler directives are shown in uppercase letters, while the instructions are shown in lowercase.

The `%include` directive causes the assembler to include the source code from another file (`io.mac` in our case). This file contains macros for the I/O routines we will discuss in the next section.

The data section is used to define the program's variables. It is divided into two parts: *initialized* and *uninitialized*. The `.DATA` macro is used to define initialized variables while the `.UDATA` macro is used to define uninitialized variables of the assembly language program. Chapter 9 discusses various assembler directives to define and initialize variables used in assembly language programs.

The `.CODE` macro terminates the data segment and starts the code section. The `.STARTUP` macro sets up the starting point. If you want, you can use the following code in its place.

```
        global    _start
_start:
```

To return control from the assembly program, we use the `.EXIT` macro, which places the code to call the `int 21H` function 4CH to return control. In place of the `.EXIT` macro, you can write your own code to call `int 21H`, as shown below.

```
mov     AX,4C00H
int     21H
```

Control is returned to the operating system by the interrupt 21H service 4CH. The service required under interrupt 21H is indicated by moving 4CH into the AH register. This service also returns an error code that is given in the AL register. It is a good practice to set AL to 0 to indicate normal termination of the program. We discuss interrupts in Chapter 20.

Input/Output Routines

This section describes the I/O routines we developed to input and output characters, strings, and signed integers. A summary of these routines is given in Table 7.1.

Character I/O

Two macros are defined to input and output characters: `PutCh` and `GetCh`. The format of `PutCh` is

```
PutCh     source
```

where `source` can be any general-purpose, 8-bit register, or a byte in memory, or a character value. Some examples follow.

```
PutCh     'A'         ; displays character A
PutCh     AL          ; displays the character in AL
PutCh     response    ; displays the character located in
                      ; memory (labeled response)
```

The format of `GetCh` is

```
GetCh     destination
```

Table 7.1 Summary of I/O routines defined in the `io.mac` file

name	operand(s)	operand location	size	what it does
`PutCh`	`source`	value register memory	8 bits	Displays the character located at `source`
`GetCh`	`dest`	register memory	8 bits	Reads a character into `dest`
`nwln`	none	—	—	Displays a newline
`PutStr`	`source`	memory	variable	Displays the NULL-terminated string at `source`
`GetStr`	`dest[,buf_size]`	memory	variable	Reads a carriage-return-terminated string into `dest` and stores it as a NULL-terminated string. Maximum string length is `buf_size-1`.
`PutInt`	`source`	register memory	16 bits	Displays the signed 16-bit number located at `source`
`GetInt`	`dest`	register memory	16 bits	Reads a signed 16-bit number into `dest`
`PutLInt`	`source`	register memory	32 bits	Displays the signed 32-bit number located at `source`
`GetLInt`	`dest`	register memory	32 bits	Reads a signed 32-bit number into `dest`

where `destination` can be either an 8-bit, general-purpose register or a byte in memory. Some examples are given here.

```
GetCh    DH
GetCh    response
```

In addition, a `nwln` macro is defined to display a newline. It takes no operands.

String I/O

The `PutStr` and `GetStr` macros are defined to display and read strings, respectively. The strings are assumed to be in the NULL-terminated format. That is, the last character of the string is the NULL character, which signals the end of the string. Strings are discussed in Chapter 17.

The format of `PutStr` is

```
PutStr    source
```

where `source` is the name of the buffer containing the string to be displayed. For example,

```
PutStr    message
```

displays the string stored in the buffer `message`. Strings are limited to 80 characters. If the buffer does not contain a NULL-terminated string, a maximum of 80 characters are displayed.

The format of `GetStr` is

```
GetStr    destination [, buffer_size]
```

where `destination` is the buffer name into which the string from the keyboard is read. The input string can be terminated by a carriage-return. You can also specify an optional value for `buffer_size`. If it is not specified, a buffer size of 81 is assumed. Thus, in the default case, a maximum of 80 characters are read into the string. If a value is specified, `buffer_size-1` characters are read. The string is stored as a NULL-terminated string. While entering a string, you can backspace to correct the input. Here are some examples.

```
GetStr    in_string     ; reads at most 80 characters
GetStr    TR_title,41   ; reads at most 40 characters
```

Numeric I/O

There are four macros for performing integer I/O: two are used for 16-bit integers and the other two for 32-bit integers. First we look at the 16-bit integer I/O routines—`PutInt` and `GetInt`. The formats are

```
PutInt    source
GetInt    destination
```

where `source` and `destination` can be a 16-bit, general-purpose register or the label of a memory word.

The `PutInt` macro displays the signed number at `source`. It suppresses all leading 0s. The `GetInt` macro reads a 16-bit signed number into destination. You can backspace while entering a number. The valid range of input numbers is −32,768 to +32,767. If an invalid input (such as typing a nondigit character) or out-of-range number is given, an error message is displayed and the user is asked to type a valid number. Some examples are given below.

```
PutInt    AX
PutInt    sum
GetInt    CX
GetInt    count
```

Long integer I/O is similar except that the source and destination must be a 32-bit register or a label of a memory doubleword (i.e., 32 bits). For example, if `total` is a 32-bit number in memory, we can display it by

```
PutLInt   total
```

and read a long integer from the keyboard into `total` by

```
GetLInt   total
```

Some examples that use registers are:

```
PutLInt   EAX
GetLInt   EDX
```

An Example Program

Program 7.1 gives a simple example to demonstrate how some of these I/O routines can be used to facilitate input and output. The program requests the user for a name and a repeat count. After confirming the repeat count, it displays a welcome message repeat count times.

The program uses the db (define byte) assembly language directive to declare several strings (lines 11–15). All these strings are terminated by a 0, which is the ASCII value for the NULL character. Similarly, in the uninitialized data area, we use the resb directive to allocate 16 bytes for a buffer to store the user name and another byte to store the user response to the repeat count confirmation message (lines 18 and 19). These assembler directives are discussed in Chapter 9.

We use PutStr on line 23 to prompt the user for her or his name. The name is read as a string using GetStr into the user_name buffer (line 24). Since we allocated only 16 bytes for the buffer, the name cannot be more than 15 characters. We enforce this by specifying the optional buffer size parameter in the GetStr macro. The PutStr on line 26 requests a repeat count, which is read by GetInt on line 27.

Program 7.1 An example assembly program (for now, you can safely ignore the assembly language statements on lines 32, 33, and 38)

```
 1:  ;An example assembly language program            SAMPLE.ASM
 2:  ;
 3:  ;         Objective: To demonstrate the use of some I/O
 4:  ;                    routines and to show the structure
 5:  ;                    of assembly language programs.
 6:  ;            Inputs: As prompted.
 7:  ;           Outputs: As per input.
 8:  %include  "io.mac"
 9:
10:  .DATA
11:  name_msg      db   'Please enter your name: ',0
12:  query_msg     db   'How many times to repeat welcome message? ',0
13:  confirm_msg1  db   'Repeat welcome message ',0
14:  confirm_msg2  db   ' times? (y/n) ',0
15:  welcome_msg   db   'Welcome to Assembly Language Programming ',0
16:
17:  .UDATA
18:  user_name    resb  16              ; buffer for user name
19:  response     resb  1
20:
21:  .CODE
22:      .STARTUP
23:      PutStr  name_msg            ; prompt user for his/her name
24:      GetStr  user_name,16        ; read name (max. 15 characters)
25:  ask_count:
26:      PutStr  query_msg           ; prompt for repeat count
27:      GetInt  CX                  ; read repeat count
28:      PutStr  confirm_msg1        ; confirm repeat count
29:      PutInt  CX                  ; by displaying its value
30:      PutStr  confirm_msg2
```

```
31:         GetCh    [response]           ; read user response
32:         cmp      byte [response],'y'  ; if 'y', display welcome message
33:         jne      ask_count            ; otherwise, request repeat count
34:     display_msg:
35:         PutStr   welcome_msg          ; display welcome message
36:         PutStr   user_name            ; display the user name
37:         nwln
38:         loop     display_msg          ; repeat count times
39:         .EXIT
```

The confirmation message is displayed by lines 28–30. The response of the user `y` or `n` is read by `GetCh` on line 31. If the response is `y`, the loop (lines 34–38) displays the welcome message repeat count times. A sample interaction with the program is shown below.

```
Please enter your name: Veda
How many times to repeat welcome message? 5
Repeat welcome message 5 times? (y/n) y
Welcome to Assembly Language Programming Veda
Welcome to Assembly Language Programming Veda
Welcome to Assembly Language Programming Veda
Welcome to Assembly Language Programming Veda
Welcome to Assembly Language Programming Veda
```

Assembling and Linking

Figure 7.2 shows the steps involved in converting an assembly language program into an executable code. It uses the `sample.asm` file as an example. The source assembly language file `sample.asm` is given as input to the assembler. The assembler translates the assembly language program into an object program `sample.o`. The linker takes one or more object programs (in our example the `sample.o` and `io.o` files) and combines them into an executable program `sample`. The following subsections describe each of these steps in detail.

The Assembly Process

The general format to assemble a program is

```
nasm  -f <format> <source-file> [-o <object-file>] [-l <list-file>]
```

where the specification of fields in [ ] is optional. If we specify only the source file, NASM produces only the object file. Thus to assemble our example source file `sample.asm`, we can use the command

```
nasm -f elf  sample.asm
```

After successfully assembling the source program, NASM generates an object file with the same file name as the source file but with `.o` extension. Thus, in our example, it generates the `sample.o` file. You can also specify a file name for the object file using the `-o` option.

If you want the assembler to generate the listing file, you can use

```
nasm  -f elf sample.asm -l sample.lst
```

This command produces two files: `sample.o` and `sample.lst`. The list file contains detailed information as we shall see next.

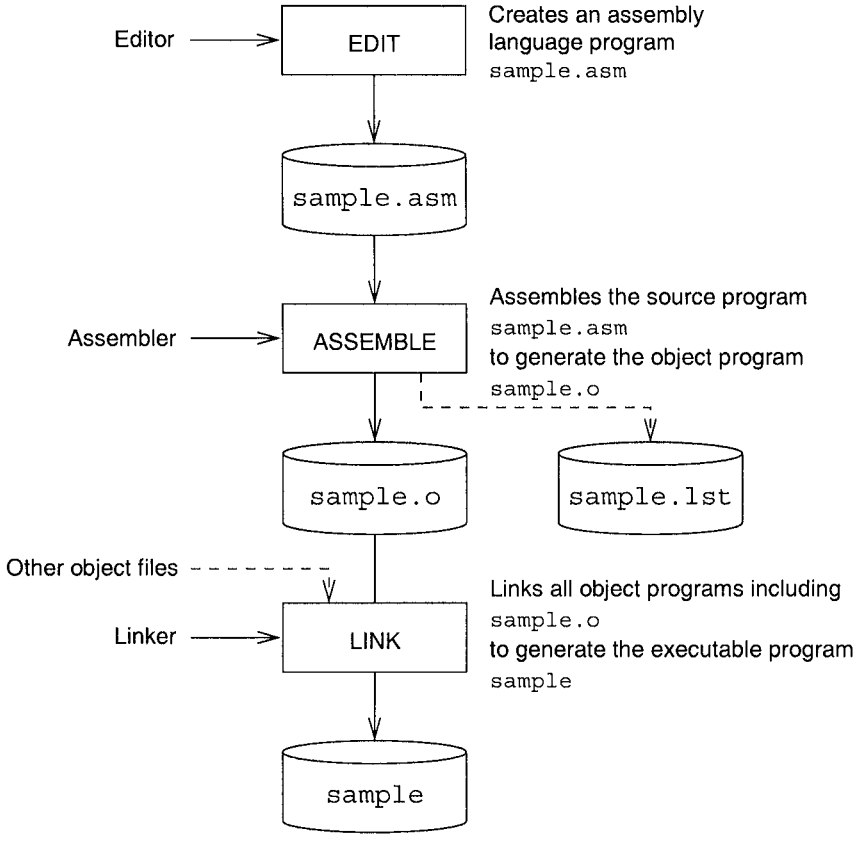

Figure 7.2 Assembling and linking assembly language programs (optional inputs and outputs are shown by dashed lines).

The List File Program 7.2 gives a simple program that reads two signed integers from the user and displays their sum if there is no overflow; otherwise, it displays an error message. The input numbers should be in the range −2,147,483,648 to +2,147,483,647, which is the range of a 32-bit signed number. The program uses `PurStr` and `GetLInt` to prompt and read the input numbers (see lines 22, 23 and 26, 27). The sum of the input numbers is computed on lines 30–32.

If the resulting sum is outside the range of a signed 32-bit integer, the overflow flag is set by the `add` instruction. In this case, the program displays the overflow message (line 36). If there is no overflow, the sum is displayed (lines 42 and 43).

The list file for the source program `sumprog.asm` is shown in Program 7.3. In addition to the original source code lines, it contains a lot of useful information about the results of the assembly. This additional information includes the actual machine code generated for the executable statements and the offset of each statement.

Program 7.2 An assembly language program to add two integers `sumprog.asm`

```
;Assembly language program to find sum   SUMPROG.ASM
;
;         Objective: To add two integers.
;            Inputs: Two integers.
;            Output: Sum of input numbers.
%include  "io.mac"

.DATA
prompt1_msg  db  'Enter first number: ',0
prompt2_msg  db  'Enter second number: ',0
sum_msg      db  'Sum is: ',0
error_msg    db  'Overflow has occurred!',0

.UDATA
number1      resd  1        ; stores first number
number2      resd  1        ; stores first number
sum          resd  1        ; stores sum

.CODE
      .STARTUP
      ; prompt user for first number
      PutStr  prompt1_msg
      GetLInt [number1]

      ; prompt user for second number
      PutStr  prompt2_msg
      GetLInt [number2]

      ; find sum of two 32-bit numbers
      mov     EAX,[number1]
      add     EAX,[number2]
      mov     [sum],EAX

      ; check for overflow
      jno     no_overflow
      PutStr  error_msg
      nwln
      jmp     done

      ; display sum
no_overflow:
      PutStr  sum_msg
      PutLInt [sum]
      nwln
done:
      .EXIT
```

List File Contents The format of the list file lines is

```
line#  offset  machine-code  nesting-level  source-line
```

`line#`: is the listing file line number. These numbers are different from the line numbers in the source file. This can be due to include files, macros, and so on, as shown in Program 7.3.

`offset`: is an 8-digit hexadecimal offset value of the machine code for the source statement. For example, the offset of the first instruction (line 187) is `00000000H`, and that of the `add` instruction on line 219 is `00000035H`. Source lines such as comments do not generate any offset.

`machine-code`: is the hexadecimal representation of the machine code for the assembly language instruction. For example, the machine language encoding of

```
mov     EAX,[number1]
```

is `A1[00000000]` (line 218) and requires five bytes. The value zero in [ ] is the offset of `number1` in the data segment (see line 173).

Similarly, the machine language encoding of

```
jmp     done
```

is `E91D000000` (line 231), requiring five bytes.

`nesting-level`: is the level of nesting of "include files" and macros.

`source-line`: is a copy of the original source code line. As you can see from Program 7.3, the number of bytes required for the machine code depends on the source instruction. When operands are in memory (e.g., `number1`), their relative address is used in the instruction encoding. The actual value is fixed up by the linker after all the object files are combined (for example, `io.o` in our example). Also note that the macro definitions are expanded. For example, the `PutStr` on line 186 is expanded on lines 187 through 190.

Program 7.3 The list file for the example assembly program `sumprog.asm`

```
 1                                  ;Assembly language program to find sum. . .
 2                                  ;
 3                                  ;         Objective: To add two integers.
 4                                  ;            Inputs: Two integers.
 5                                  ;            Output: Sum of input numbers.
 6                                  %include  "io.mac"
 7                              <1> extern   proc_nwln, proc_PutCh, proc_PutStr
 8                              <1> extern   proc_GetStr, proc_GetCh
 9                              <1> extern   proc_PutInt, proc_GetInt
10                              <1> extern   proc_PutLInt, proc_GetLInt
11                              <1>
12                              <1> ;;-----------------------------------
13                              <1> %macro  .STARTUP  0
14                              <1> ;group dgroup .data .bss
15                              <1>         global   _start
16                              <1> _start:
17                              <1> %endmacro
18                              <1> ;;-----------------------------------
```

```
                                <1>
                                <1>
                                <1> ;;-----------------------------------
                                <1> %macro  .EXIT  0
                                <1>         mov    EAX,1
                                <1>         xor    EBX,EBX
                                <1>         int    0x80
                                <1> %endmacro
                                <1> ;;-----------------------------------
                                <1>
                                <1>
                                <1> ;;-----------------------------------
                                <1> %macro  .DATA 0
                                <1>         segment .data
                                <1> %endmacro
                                <1> ;;-----------------------------------
                                <1>
                                <1> ;;-----------------------------------
                                <1> %macro  .UDATA 0
                                <1>         segment .bss
                                <1> %endmacro
                                <1> ;;-----------------------------------
. . .          . . . . . . .          . . . . . . . . . . .
                                    .DATA
                                <1>  segment .data
00000000 456E74657220666972-        prompt1_msg  db  'Enter first number: ',0
00000009 7374206E756D626572-
00000012 3A2000
00000015 456E74657220736563-        prompt2_msg  db  'Enter second number: ',0
0000001E 6F6E64206E756D6265-
00000027 723A2000
0000002B 53756D2069733A2000         sum_msg      db  'Sum is: ',0
00000034 4F766572666C6F7720-        error_msg    db  'Overflow has occurred!',0
0000003D 686173206F63637572-
00000046 7265642100

                                    .UDATA
                                <1>  segment .bss
00000000 <res 00000004>             number1      resd  1   ; stores first number
00000004 <res 00000004>             number2      resd  1   ; stores first number
00000008 <res 00000004>             sum          resd  1   ; stores sum

                                    .CODE
                                <1>  segment .data
                                <1>  segment .bss
                                <1>  segment .text
                                          .STARTUP
                                <1>
                                <1>  global _start
                                <1> _start:
                                          ; prompt user for first number
                                          PutStr  prompt1_msg
00000000 51                     <1>  push ECX
00000001 B9[00000000]           <1>  mov ECX,%1
00000006 E8(00000000)           <1>  call proc_PutStr
0000000B 59                     <1>  pop ECX
                                          GetLInt [number1]
                                <1> %ifnidni %1,EAX
0000000C 50                     <1>  push EAX
```

```
194 0000000D E8(00000000)          <1>  call proc_GetLInt
195 00000012 A3[00000000]          <1>  mov %1,EAX
196 00000017 58                    <1>  pop EAX
197                                <1> %else
198                                <1>  call proc_GetLInt
199                                <1> %endif
200
201                                          ; prompt user for second number
202                                          PutStr  prompt2_msg
203 00000018 51                    <1>  push ECX
204 00000019 B9[15000000]          <1>  mov ECX,%1
205 0000001E E8(00000000)          <1>  call proc_PutStr
206 00000023 59                    <1>  pop ECX
207                                          GetLInt [number2]
208                                <1> %ifnidni %1,EAX
209 00000024 50                    <1>  push EAX
210 00000025 E8(00000000)          <1>  call proc_GetLInt
211 0000002A A3[04000000]          <1>  mov %1,EAX
212 0000002F 58                    <1>  pop EAX
213                                <1> %else
214                                <1>  call proc_GetLInt
215                                <1> %endif
216
217                                          ; find sum of two 32-bit numbers
218 00000030 A1[00000000]                    mov     EAX,[number1]
219 00000035 0305[04000000]                  add     EAX,[number2]
220 0000003B A3[08000000]                    mov     [sum],EAX
221
222                                          ; check for overflow
223 00000040 7116                            jno     no_overflow
224                                          PutStr  error_msg
225 00000042 51                    <1>  push ECX
226 00000043 B9[34000000]          <1>  mov ECX,%1
227 00000048 E8(00000000)          <1>  call proc_PutStr
228 0000004D 59                    <1>  pop ECX
229                                          nwln
230 0000004E E8(00000000)          <1>  call proc_nwln
231 00000053 E91D000000                      jmp     done
232
233                                          ; display sum
234                                     no_overflow:
235                                          PutStr  sum_msg
236 00000058 51                    <1>  push ECX
237 00000059 B9[2B000000]          <1>  mov ECX,%1
238 0000005E E8(00000000)          <1>  call proc_PutStr
239 00000063 59                    <1>  pop ECX
240                                          PutLInt [sum]
241 00000064 50                    <1>  push EAX
242 00000065 A1[08000000]          <1>  mov EAX,%1
243 0000006A E8(00000000)          <1>  call proc_PutLInt
244 0000006F 58                    <1>  pop EAX
245                                          nwln
246 00000070 E8(00000000)          <1>  call proc_nwln
247                                     done:
248                                          .EXIT
249 00000075 B801000000            <1>  mov EAX,1
250 0000007A 31DB                  <1>  xor EBX,EBX
251 0000007C CD80                  <1>  int 0x80
```

Linking Object Files

Linker is a program that takes one or more object programs as its input and produces executable code. In our example, since I/O routines are defined separately, we need two object files—`sample.o` and `io.o`—to generate the executable file `sample` (see Figure 7.2). To do this, we use the command

```
ld -s -o sample sample.o io.o
```

If you intend to debug your program using `gdb`, you should use the `stabs` option during the assembly in order to export the necessary symbolic information. We discuss this option in the next chapter, which deals with debugging.

Summary

We presented details about the NASM assembler. We also presented the template used to write stand-alone assembly language programs. Since the assembly language does not provide a convenient mechanism to do input and output, we defined a set of I/O routines to help us in performing simple character, string, and numeric input and output. We used simple examples to illustrate the use of these I/O routines in a typical stand-alone assembly language program.

To execute an assembly language program, we have to first translate it into an object program by using an assembler. Then we have to pass this object program, along with any other object programs needed by the program, to a linker to produce the executable code. We used NASM to assemble the programs. Note that NASM produces additional files that provide information on the assembly process. The list file is the one we often use to see the machine code and other details.

Web Resources

Documentation (including the NASM manual) and download information on NASM are available from `http://sourceforge.net/projects/nasm`.

8

Debugging Assembly Language Programs

Debugging assembly language programs is more difficult and time-consuming than debugging high-level language programs. However, the fundamental strategies that work for high-level languages also work for assembly language programs. We start this chapter with a discussion of these strategies. Since you are familiar with debugging programs written in a high-level language, this discussion is rather brief.

The following section discusses the GNU debugger (GDB). This is a command-line debugger. A nice visual interface to GDB is provided by Dynamic Data Display (DDD), which is described toward the end of the chapter. We use a simple example to explain some of the commands of GDB and DDD. The chapter concludes with a summary.

As we have not yet covered the assembly language programming, you may want to read this chapter in two passes. In the first pass, your goal is to get an overview of the two debuggers and some hands-on experience in invoking and using them. In this pass, you can skip the material that specifically deals with assembly language program statements. In the second pass, you can look at the skipped material. Ideally, you can come back to this chapter after you are familiar with the material presented in Chapters 9 through 11.

Strategies to Debug Assembly Language Programs

Programming is a complicated task. Loosely speaking, a program can be thought of as mapping a set of input values to a set of output values. The mapping performed by a program is given as the specification for the programming task. It goes without saying that when the program is written, it should be verified to meet the specifications. In programming parlance, this activity is referred to as testing and validating the program.

Testing a program itself is a complicated task. Typically, test cases, selected to validate the program, should test each possible path in the program, boundary cases, and so on. During this process, errors ("bugs") are discovered. Once a bug is found, it is necessary to find the source code causing the error and fix it. This process is known by its colorful name, *debugging*.

Debugging is not an exact science. We have to rely on our intuition and experience. However, there are tools that can help us in this process. Several debuggers are available to help us in the debugging process. We will look at two such tools in this chapter—GDB and DDD. Note that our goal here is to introduce the basics of the debugging process, as the best way to get familiar with debugging is to use a debugger.

Finding bugs in a program is very much dependent on the individual program. Once an error is detected, there are some general ways of locating the source code lines causing the error. The basic principle that helps you in writing the source program in the first place—the divide and conquer technique—is also useful in the debugging process. Structured programming methodology facilitates debugging greatly.

A program typically consists of several modules, where each module may have several procedures. When developing a program, it is best to do incremental development. In this methodology, a few procedures are added to the program to add some specific functionality. The program must be tested before adding other functions to the program. In general, it is a bad idea to write the whole program and then testing it, unless the program is small. The best strategy is to write code that has as few bugs as possible. This can be achieved by using pseudocode and verifying the logic of the pseudocode even before you attempt to translate it into the assembly language program. This is a good way of catching many of the logical errors and saves a lot of debugging time. Never write an assembly language code with the pseudo-code in your head! Furthermore, don't be in a hurry to write assembly language code that appears to work. This is short sighted, as we end up spending more time in the debugging phase.

To isolate a bug, program execution should be observed in slow motion. Most debuggers provide a command to execute a program in single-step mode. In this mode, a program executes a single statement and pauses. Then we can examine contents of registers, data in memory, stack contents, and so on. In the single-step mode, a procedure call is treated as a single statement and the entire procedure is executed before pausing the program. This is useful if you know that the called procedure works correctly. Debuggers also provide another command to trace even the statements of a procedure call, which is useful in testing procedures.

Often we know that some parts of the program work correctly. In this case, it is a sheer waste of time to single step or trace the code. What we would like is to execute this part of the program and then stop for more careful debugging (perhaps by single stepping). Debuggers provide commands to set up breakpoints. The program execution stops at breakpoints, giving us a chance to look at the state of the program.

Another helpful feature that most debuggers provide is the watch facility. By using watches, it is possible to monitor the state (i.e., values) of the variables in the program as the execution progresses.

In the rest of the chapter, we discuss two debuggers and show how they are useful in debugging assembly language programs. Our debugging sessions use the following program, which is discussed in Chapter 11.

Program 8.1 An example program used to explain debugging

```
;Parameter passing via registers                    PROCEX1.ASM
;
;        Objective: To show parameter passing via registers.
;            Input: Requests two integers from the user.
```

```
 5:  ;            Output: Outputs the sum of the input integers.
 6:  %include "io.mac"
 7:  .DATA
 8:  prompt_msg1  DB   "Please input the first number: ",0
 9:  prompt_msg2  DB   "Please input the second number: ",0
10:  sum_msg      DB   "The sum is ",0
11:
12:  .CODE
13:        .STARTUP
14:        PutStr  prompt_msg1    ; request first number
15:        GetInt  CX             ; CX = first number
16:
17:        PutStr  prompt_msg2    ; request second number
18:        GetInt  DX             ; DX = second number
19:
20:        call    sum            ; returns sum in AX
21:        PutStr  sum_msg        ; display sum
22:        PutInt  AX
23:        nwln
24:  done:
25:        .EXIT
26:
27:  ;-----------------------------------------------------------
28:  ;Procedure sum receives two integers in CX and DX.
29:  ;The sum of the two integers is returned in AX.
30:  ;-----------------------------------------------------------
31:  sum:
32:        mov     AX,CX          ; sum = first number
33:        add     AX,DX          ; sum = sum + second number
34:        ret
```

Preparing Your Program

The assembly process described in the last chapter works fine if we just want to assemble and run our program. However, we need to prepare our program slightly differently to debug the program. More specifically, we would like to pass the source code and symbol table information so that we can debug using the source-level statements. This source-level debugging is much better than debugging using disassembled code.

To facilitate such symbolic debugging, we need to export symbolic information to the GNU debugger. This debugger expects the symbolic information in the `stabs` format. More details on this format are available in the GDB manual available online (see "Web Resources" section at the end of the chapter).

We can assemble and load a program (say, `procex1.asm`) for debugging as follows:

```
nasm -f elf -g -F stabs procex1.asm
ld -o procex1 procex1.o io.o
```

The executable program `procex1` would have the necessary symbolic information to help us in the debugging process. Note that we need to include the I/O file `io.o` because our programs use the I/O routines described in the last chapter.

GNU Debugger

This section describes the GNU debugger gdb. It is typically invoked by

```
gdb file_name
```

For example, to debug the procex1 program, we can use

```
gdb procex1
```

We can also invoke gdb without giving the filename. We can specify the file to be debugged by using the file command inside the gdb. Details on the file command are available in the GDB manual. You know that gdb is running the show when you see the (gdb) prompt. At this prompt, it can accept one of several commands. Tables 8.1 and 8.2 show some of the commands useful in debugging programs.

Display Group

Displaying Source Code When debugging, it is handy to keep a printed copy of the source code with line numbers. However, gdb has list commands that allow us to look at the source code. A simple list command takes no arguments. The command

```
list
```

displays the default number of lines. The default is 10 lines. If we issue this command again, it displays the next 10 lines. We can use list - to print lines before the last printed lines. We can abbreviate this command to l.

We can specify a line number as an argument. In this case, it displays 10 lines centered on the specified line number. For example, the command

```
l 20
```

displays lines 15 through 24, as shown in Program 8.2 on page 178. The list command can also take other arguments. For example,

```
l first,last
```

displays the lines from first to last.

The default number of lines displayed can be changed to n with the following command:

```
set listsize n
```

The command show listsize gives the current default value.

Displaying Register Contents When debugging an assembly language program, we often need to look at the contents of the registers. The info can be used for this purpose. The

```
info registers
```

displays the contents of the integer registers. To display all registers including the floating-point registers, use

Table 8.1 Some of the GDB display commands

Display Commands	
Source code display commands	
`list`	Lists default number of source code lines from the last displayed lines (default is 10 lines). It can be abbreviated as `l`.
`list -`	Lists default number of source code lines preceding the last displayed lines (default is 10 lines)
`list linenum`	Lists default number of lines centered around the specified line number `linenum`
`list first,last`	Lists the source code lines from `first` to `last`
Register display commands	
`info registers`	Displays the contents of registers except floating-point registers
`info all-registers`	Displays the contents of registers
`info register ...`	Displays contents of the specified registers
Memory display commands	
`x address`	Displays the contents of memory at `address` (uses defaults)
`x/nfu adddress`	Displays the contents of memory at `address`
Stack frame display commands	
`backtrace`	Displays backtrace of the entire stack (one line for each stack frame). It can be abbreviated as `bt`.
`backtrace n`	Displays backtrace of the innermost `n` stack frames
`backtrace -n`	Displays backtrace of the outermost `n` stack frames
`frame n`	Select frame `n` (frame zero is the innermost frame i.e., currently executing frame). It can be abbreviated as `f`.
`info frame`	Displays a description of the selected stack frame (details include the frame address, program counter saved in it, addresses of local variable and arguments, addresses of the next and previous frames, and so on)

```
info all-registers
```

Often we are interested in a select few registers. To avoid cluttering the display, `gdb` allows specification of the registers in the command. For example, we can use

```
info eax ecx edx
```

to check the contents of the `eax`, `ecx`, and `edx` registers.

Displaying Memory Contents We can examine memory contents by using the `x` command (`x` stands for examine). It has the following syntax:

Table 8.2 Some of the GDB commands (continued on the next page)

Execution Commands	
Breakpoint commands	
`break linenum`	Sets a breakpoint at the specified line number in the current source file.
`break function`	Sets a breakpoint at entry to the specified function in the current source file.
`break *address`	Sets a breakpoint at the specified address. This command is useful if the debugging information or the source files are not available.
`info breakpoints`	Gives information on the breakpoints set. The information includes the breakpoint number, where the breakpoint is set in the source code, address, status (enabled or disabled), and so on.
`delete`	Deletes all breakpoints. By default, `gdb` runs this in query mode asking for confirmation for each breakpoint to be deleted. We can also specify a range as arguments (`delete range`). This command can be abbreviated as `d`.
`tbreak arg`	Sets a breakpoint as in break. The `arg` can be a line number, function name, or address as in the `break` command. However, the breakpoint is deleted after the first hit.
`disable range`	Disables the specified breakpoints. If no range is given, all breakpoints are disabled.
`enable range`	Enables the specified breakpoints. If no range is given, all breakpoints are enabled.
`enable once range`	Enables the specified breakpoints once i.e., when the breakpoint is hit, it is disabled. If no range is given, all breakpoints are enabled once.
Program execution commands	
`run`	Executes the program under `gdb`. To be useful, you should set up appropriate breakpoints before issuing this command. It can be abbreviated as `r`.
`continue`	Continues execution from where the program has last stopped (e.g., due to a breakpoint). It can be abbreviated as `c`.

```
x/nfu address
```

where `n`, `f`, and `u` are optional parameters that specify the amount of memory to be displayed starting at `address` and its format. If the optional parameters are not given, the `x` command can be written as

```
x address
```

Table 8.2 *(continued)*

Single stepping commands	
`step`	Single-steps execution of the program (i.e., one source line at a time). In case of a procedure call, it single-steps into the procedure code. It can be abbreviated as `s`.
`step count`	Single-steps program execution `count` times. If it encounters a breakpoint before reaching the count, it stops execution.
`next`	Single-steps as the `step` command does; however, procedure call is treated as a single statement (does not jump into the procedure code). As in the `step` command, we can specify a `count` value. It can be abbreviated as `n`.
`next count`	Single-steps program execution `count` times. If it encounters a breakpoint before reaching the count, it stops execution.
`stepi`	Executes one machine instruction. Like the `step` command, it single-steps into the procedure body. For assembly language programs, both `step` and `stepi` tend to behave the same. As in the `step` command, we can specify a `count` value. It can be abbreviated as `si`.
`nexti`	Executes one machine instruction. Like the `next` command, it treats a procedure call as a single machine instruction and executes the whole procdure. As in the `next` command, we can specify a `count` value. It can be abbreviated as `ni`.
Miscellaneous Commands	
`set listsize n`	Sets the default list size to `n` lines
`show listsize`	Shows the default list size
`q`	Quits `gdb`

In this case the default values are used for the three optional parameters. Details about these parameters are given in Table 8.3.

Next we look at some examples of the `x` command. When `gdb` is invoked with Program 8.1, we can examine the contents of the memory at `prompt_msg1` by using the following `x` command:

```
(gdb) x/1sb &prompt_msg1
0x80493e4 <prompt_msg1>:      "Please input the first number: "
```

This command specifies the three optional parameters as `n` = 1, `f` = s, and `u` = b. We get the following output when we change the `n` value to 3:

```
(gdb) x/3sb &prompt_msg1
0x80493e4 <prompt_msg1>:      "Please input the first number: "
0x8049404 <prompt_msg2>:      "Please input the second number: "
0x8049425 <sum_msg>:          "The sum is "
```

Table 8.3 Details about the optional parameters

n	Repeat count (decimal integer) Specifies the number of units (in u) of memory to be displayed. Default value is 1.
f	Display format x displays in hexadecimal d displays in decimal u displays in unsigned decimal o displays in octal t displays in binary (t for two) a displays address both in hexadecimal and as an offset from the nearest preceding symbol c displays as a character s displays as a null-terminated string t displays as a floating-point number i displays as a machine instruction Initial default is x. The default changes each time x is used.
u	Unit size b bytes h halfwords (2 bytes) w words (4 bytes) g giant words (8 bytes) Initial default is w. The default changes when a unit is specified with an x command.

As you can see from the program listing, it matches the three strings we declared in `procex1.asm` program.

Displaying Stack Frame Contents This group of display commands helps us trace the history of procedure invocations. The `backtrace` command gives a list of procedure invocations at that point. This list consists of one line for each stack frame of the stack. As an example, consider a program that calls a procedure `sum` that calls another procedure `compute`, which in turn calls a third procedure `get_values`. If we stop the program in the `get_values` procedure and issue a `backtrace` command, we see the following output:

```
(gdb) bt
#0  get_values () at testex.asm:50
#1  0x080480bc in compute () at testex.asm:41
#2  0x080480a6 in sum () at testex.asm:27
```

This output clearly shows the invocation sequence of procedure calls with one line per invocation. The innermost stack frame is labelled `#0`, the next stack frame as `#1`, and so on. Each line gives the source code line that invoked the procedure. For example, the `call` instruction on line 27 (in the source file `testex.asm`) invoked the `compute` procedure. The program counter value

0x080480a6 gives the return address. As we shall discuss in Chapter 11, this is the address of the instruction following the

```
call    compute
```

instruction in the sum procedure. Similarly, the call instruction on line 41 in the compute procedure invoked the get_values procedure. The return address for the get_values procedure is 0x080480bc.

We can also restrict the number of stack frames displayed in the backtrace command by giving an optional argument. Details on this optional argument are given in Table 8.1. For example, bt 2 gives the innermost two stack frames as shown below:

```
(gdb) bt 2
#0  get_values () at testex.asm:50
#1  0x080480bc in compute () at testex.asm:41
(More stack frames follow...)
```

To display the outermost two stack frames, we can issue bt -2. This command produces the following output for our example program:

```
(gdb) bt -2
#1  0x080480bc in compute () at testex.asm:41
#2  0x080480a6 in sum () at testex.asm:27
```

The frame and info frame commands allow us to examine the contents of a frame. We can select a frame by using the frame command. For our test program, frame 1 gives the following output:

```
(gdb) frame 1
#1  0x080480bc in compute () at testex.asm:41
41      call get_values
```

Once a frame is selected, we can issue the info frame command to look at the contents of this stack frame. Note that if no frame is selected using the frame command, it defaults to frame 0. The output produced for our example is shown below:

```
(gdb) info f
Stack level 1, frame at 0xbffffa00:
 eip = 0x80480bc in compute (testex.asm:41); saved eip 0x80480a6
 called by frame at 0xbffffa08, caller of frame at 0xbffff9f8
 source language unknown.
 Arglist at 0xbffffa00, args:
 Locals at 0xbffffa00, Previous frame's sp is 0x0
 Saved registers:
  ebp at 0xbffffa00, eip at 0xbffffa04
(gdb)
```

In our example, each stack frame consists of the return address (4 bytes) and the EBP value stored by enter 0,0 instruction on entering a procedure. The details given here indicate that the current stack frame is at 0xbffffa00 and previous and next frames are at 0xbffffa08 and 0xbffff9f8, respectively. It also shows where the arguments and locals are located as well as the registers saved on the stack. In our example, only the return address (EIP) and stack pointer (EBP) are stored on the stack for a total of 8 bytes.

Execution Group

Breakpoint Commands Breakpoints can be inserted using the `break` commands. As indicated in Table 8.2, breakpoints can be specified using the source code line number, function name, or the address. For example, the following commands insert breakpoint at line 20 and function `sum` on line 32 in the `procex1.asm` program:

```
(gdb) b 20
Breakpoint 1 at 0x80480b0: file procex1.asm, line 20.
(gdb) b sum
Breakpoint 2 at 0x80480db: file procex1.asm, line 32.
(gdb)
```

Note that each breakpoint is assigned a sequence number in the order we establish them.

We can use `info breakpoints` (or simply `info b`) to get a summary of the breakpoints and their status. For example, after establishing the above two breakpoints, if we issue the `info` command, we get the following output:

```
(gdb) info b
Num Type           Disp Enb Address    What
1   breakpoint     keep y   0x080480b0 procex1.asm:20
2   breakpoint     keep y   0x080480db procex1.asm:32
(gdb)
```

The `Disp` (Disposition) column indicates the action needed to be taken (keep, disable, or delete) when hit. By default, all breakpoints are of 'keep' type as in our example here. The `enb` column indicates whether the breakpoint is enabled or disabled. A 'y' in this column indicated that the breakpoint is enabled.

We can use `tbreak` command to set a breakpoint with 'delete' disposition as shown below:

```
(gdb) tbreak 22
Breakpoint 3 at 0x80480c1: file procex1.asm, line 22.
(gdb) info b
Num Type           Disp Enb Address    What
1   breakpoint     keep y   0x080480b0 procex1.asm:20
2   breakpoint     keep y   0x080480db procex1.asm:32
3   breakpoint     del  y   0x080480c1 procex1.asm:22
(gdb)
```

We can use the `enable` and `disable` commands to enable or disable the breakpoints. The following example disables breakpoint 2:

```
(gdb) disable 2
(gdb) info b
Num Type           Disp Enb Address    What
1   breakpoint     keep y   0x080480b0 procex1.asm:20
2   breakpoint     keep n   0x080480db procex1.asm:32
3   breakpoint     del  y   0x080480c1 procex1.asm:22
(gdb)
```

If we want to enable this breakpoint, we do so by the following command:

```
(gdb) enable 2
```

We use the `enable once` command to set a breakpoint with 'disable' disposition as shown below:

```
(gdb) enable once 2
(gdb) info b
Num Type           Disp Enb Address    What
1   breakpoint     keep y   0x080480b0 procex1.asm:20
2   breakpoint     dis  y   0x080480db procex1.asm:32
3   breakpoint     del  y   0x080480c1 procex1.asm:22
(gdb)
```

Program Execution Commands Program execution command `run` is used to start the execution of a program. To be able to debug the program, breakpoints must be established before issuing the `run` command.

The `continue` command resumes program execution from the last stop point (typically due to a breakpoint).

Single-Stepping Commands

The `gdb` debugger provides two basic single-stepping commands: `step` and `next`. The `step` command executes one source line at a time. In case of a procedure call, it traces procedure execution in the single-step mode. The `next` command is similar to the `step` command except that it does not single-step through the procedure body. Instead, it executes the entire procedure. Both `step` and `next` commands can take a `count` argument as shown in Table 8.2 on page 173. This table also gives details on the machine instruction version of these `step` and `next` commands (see the `stepi` and `nexti` commands).

Miscellaneous Group

The commands in Table 8.2 are useful to manipulate the list size and exit `gdb`.

An Example

A sample `gdb` session on `procex1.asm` is shown in Program 8.2. The `l 20` command on line 9 displays the source code centered on the source code line 20. Before issuing the `r` command on line 22, we insert a breakpoint at source code line 20 using the `break` command on line 20. The run command executes the program until it hits line 20. Then it stops and prints breakpoint information. Note that we entered two input numbers (1234 and 5678) before hitting the breakpoint.

To check that these two input numbers are read into ECX and EDX registers, we issue the `info registers` command specifying these two registers (see line 28). The output of this command shows that these registers have indeed received the two input numbers.

We run the `sum` procedure in single-step mode (see commands on lines 31, 33, and 35). To see if the result in EAX is the sum of the two input values, we display the contents of the three registers (lines 38–40) using the info registers command on line 37. After verifying, we let the program continue its execution using the continue command on line 41. Finally, on line 46, we used the quit command to exit `gdb`.

Program 8.2 A sample `gdb session`

```
 1:  GNU gdb Red Hat Linux (5.2.1-4)
 2:  Copyright 2002 Free Software Foundation, Inc.
 3:  GDB is free software, covered by the GNU General Public License, and
 4:  you are welcome to change it and/or distribute copies of it under
 5:  certain conditions. Type "show copying" to see the conditions.
 6:  There is absolutely no warranty for GDB.
 7:  Type "show warranty" for details.
 8:  This GDB was configured as "i386-redhat-linux"...
 9:  (gdb) l 20
10:  15        GetInt  CX              ; CX = first number
11:  16
12:  17        PutStr  prompt_msg2     ; request second number
13:  18        GetInt  DX              ; DX = second number
14:  19
15:  20        call    sum             ; returns sum in AX
16:  21        PutStr  sum_msg         ; display sum
17:  22        PutInt  AX
18:  23        nwln
19:  24 done:
20:  (gdb) break 20
21:  Breakpoint 1 at 0x80480b0: file procex1.asm, line 20.
22:  (gdb) r
23:  Starting program: /mnt/hgfs/winXP_D/temp/gdb_test/procex1
24:  Please input the first number: 1234
25:  Please input the second number: 5678
26:  Breakpoint 1, _start () at procex1.asm:20
27:  20        call    sum             ; returns sum in AX
28:  (gdb) info registers ecx edx
29:  ecx            0x4d2 1234
30:  edx            0x162e 5678
31:  (gdb) si
32:  32        mov     AX,CX           ; sum = first number
33:  (gdb) si
34:  33        add     AX,DX           ; sum = sum + second number
35:  (gdb) si
36:  34        ret
37:  (gdb) info registers eax ecx edx
38:  eax            0x1b00 6912
39:  ecx            0x4d2 1234
40:  edx            0x162e 5678
41:  (gdb) c
42:  Continuing.
43:  The sum is 6912
44:
45:  Program exited normally.
46:  (gdb) q
```

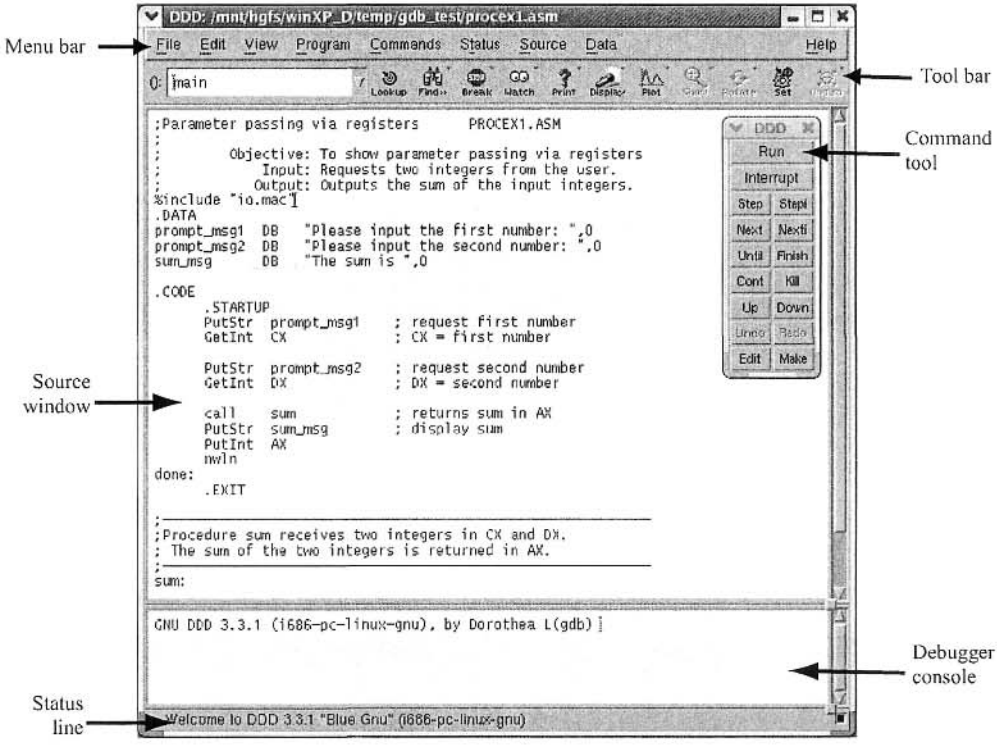

Figure 8.1 DDD window at the start of `procex1` program.

Data Display Debugger

The Data Display Debugger (DDD) acts as a front-end to a command-line debugger. DDD supports several command line debuggers including GDB, DBX, JDB, and so on. Our interest here is in using DDD as a front-end for the GDB debugger discussed in the last section.

If you installed your Linux following the directions given in Chapter 5, DDD is already installed. However, if you did not install it as part of the Linux installation, or if you want the latest version, you can install it using the Linux package manager. Also the DDD Web page has details on the installation process (see the Web Resources section at the end of the chapter for details).

Because DDD is a front-end to GDB, we prepare our program exactly as we do for the GDB (see "Preparing Your Program" section on page 169). We can invoke DDD on the `procex1` executable by

```
ddd  procex1
```

Figure 8.1 shows the initial screen that appears after invoking DDD. The screen consists of the Source Window that displays the source program, Debugger Console, Status Line, Command Tool window, Menu Bar, and Tool Bar. The debugger console acts as the program's input/output console to display messages, to receive input, and so on.

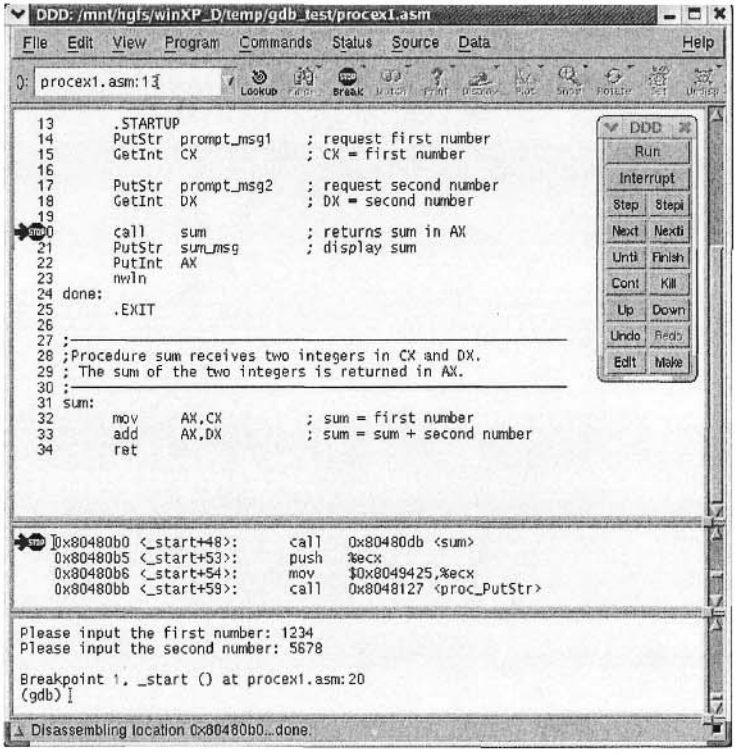

Figure 8.2 DDD window at the breakpoint on line 20. This screenshot also shows the machine code window and the source code line numbers.

We can insert a breakpoint using the Tool Bar. For example, to insert a breakpoint on line 20, place the cursor to the left of line 20 and click the breakpoint (red stop sign) on the Tool Bar. This inserts a breakpoint on line 20, which is indicated by the red stop sign on line 20 as shown in Figure 8.2. This figure also shows source code line numbers and the Machine Code window. Both of these can be selected from the `Source` pull down menu in the Menu Bar.

Once this breakpoint is inserted, we can run the program by clicking `Run` in the Command Tool. The big arrow next to the stop sign (on line 20) indicates that the program execution stopped at that line. While executing the program before reaching the breakpoint on line 20, the program takes two input numbers as shown in the Debugger Console (see Figure 8.2). We can get information on the breakpoints set in the program by selecting `Breakpoints...` in the `Source` pull-down menu. For our example program, it gives details on the single breakpoint we set on line 20 (see Figure 8.3). The details provided in this window are the same as those discussed in the last section. The breakpoint information also includes the number hits as shown in Figure 8.3.

All the execution commands of `gdb`, discussed in the last section, are available in the `Program` pull-down menu (see Figure 8.4). Figure 8.5 shows the screen after single stepping through the `sum` procedure. The program is stopped at the `ret` instruction on line 34. To verify

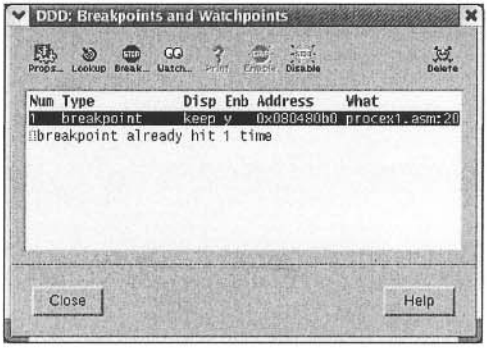

Figure 8.3 Breakpoints window.

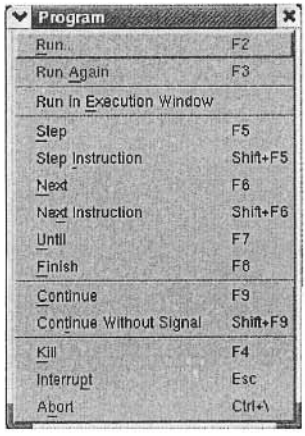

Figure 8.4 Details of the `Program` pull-down menu.

the functionality of the procedure, we can display the contents of the registers. This is done by selecting `Registers...` in the `Status` pull-down menu. The contents of the registers, shown in Figure 8.6, clearly indicate that the sum of the two input numbers (in the ECX and EDX registers) is in the EAX register.

The examination commands of `gdb` are available under `Data` pull-down menu. A sample memory examination window is shown in Figure 8.7. This window allows us to specify the memory location, format to be used to display the contents, size of the data, and the number of data items to be examined. In the window of Figure 8.7, we specified `&prompt_msg1` as the location and `string` as the output format. The size is given as `bytes` and the number of strings to be examined is set to `1`.

By clicking `Display`, the contents are displayed in the Data Window that appears above the Source Window as shown in Figure 8.8. We can pick the windows we want to see by selecting them

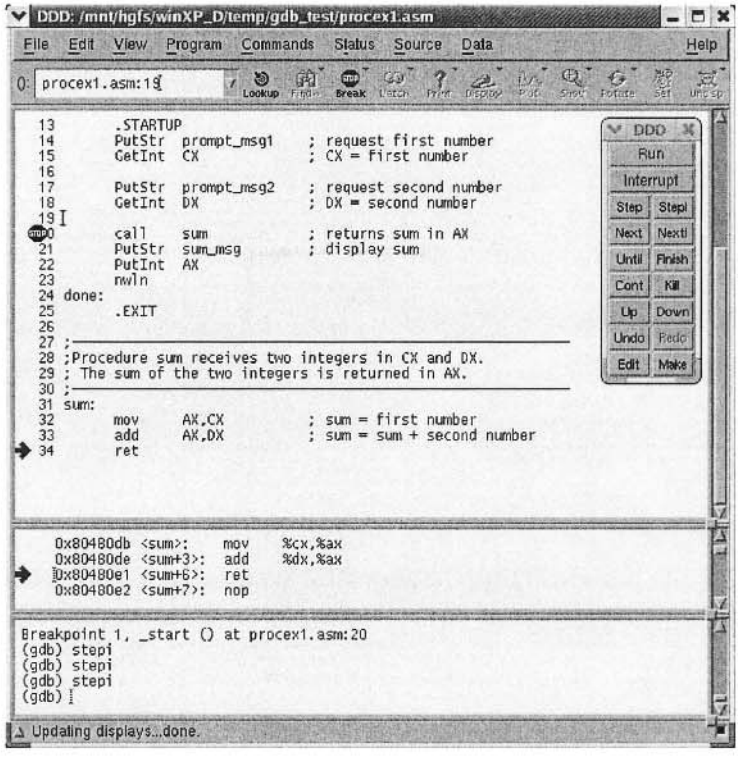

Figure 8.5 DDD window after single stepping from the breakpoint on line 20.

Figure 8.6 Register window after the single stepping shown in Figure 8.5.

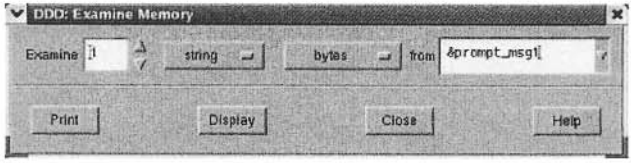

Figure 8.7 Memory examination window to display three strings.

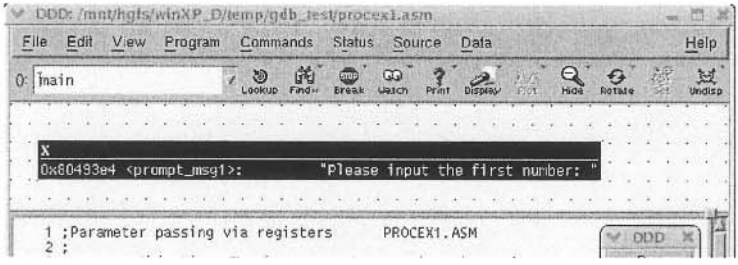

Figure 8.8 Memory examination window.

from the `View` pull-down menu. The `View` menu gives control to select any of the four windows: Debuger Console Window, Machine Code Window, Source Window, and Data Window.

We can also select to display the contents in the Debugger Console Window using the `Print` command. Figure 8.9 shows how we can display the three strings in our program in the Console window. This Examine Memory window is similar to that shown in Figure 8.7 except that we set the number of strings to be displayed as 3. The result of executing this `x` command is shown in Figure 8.10, which shows the three strings in our program.

Both gdb and DDD provide several other features that are useful in debugging programs. Our intent here is to introduce some of the basic features of these debuggers. More details on these debuggers are available from their web sites. We provide pointers to these Web sites at the end of this chapter.

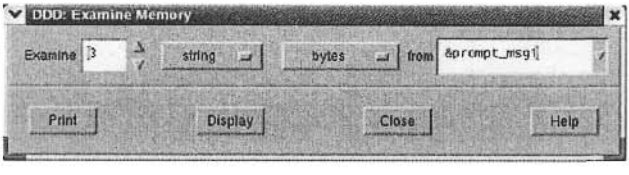

Figure 8.9 Memory examination window.

```
0x8048081 <_start+1>:      mov    $0x80493e4,%ecx
0x8048086 <_start+6>:      call   0x8048127 <proc_PutStr>

(gdb) x /3sb &prompt_msg1
0x80493e4 <prompt_msg1>:        "Please input the first number: "
0x8049404 <prompt_msg2>:        "Please input the second number: "
0x8049425 <sum_msg>:     "The sum is "
(gdb)

0x80493e4 <prompt_msg1>: "Please input the first number: "
```

Figure 8.10 CPU window after executing `Goto...` command.

Summary

We started this chapter with a brief discussion of the basic debugging techniques. Since assembly language is a low-level programming language, debugging tends to be even more tedious than debugging a high-level language program. It is, therefore, imperative to follow good programming practices in order to simplify debugging of assembly language programs.

There are several tools available for debugging programs. We discussed two debuggers—`gdb` and DDD—in this chapter. While `gdb` is a command line-oriented debugger, the DDD provides a nice front-end to it. The best way to learn to use these debuggers is by hands-on experience.

Web Resources

Details on `gdb` are available from `http://www.gnu.org/software/gdb`. The *GDB User Manual* is available from `http://www.gnu.org/software/gdb/documentation`.

Details on DDD are available from `http://www.gnu.org/software/ddd`. The *DDD Manual* is available from `http://www.gnu.org/manual/ddd/`.

PART V

Assembly Language

9

A First Look at Assembly Language

The objective of this chapter is to introduce the basics of the assembly language. Assembly language statements can either instruct the processor to perform a task, or direct the assembler during the assembly process. The latter statements are called assembler directives. We start this chapter with a discussion of the format and types of assembly language statements. A third type of assembly language statements called macros is covered in the next chapter.

Assemblers provide several directives to reserve storage space for variables. These directives are discussed in detail. The instructions of the processor consist of an operation code to indicate the type of operation to be performed, and the specification of the data required (also called the addressing mode) by the operation. Here we describe a few basic addressing modes. A thorough discussion of this topic is in Chapter 13.

The IA-32 instruction set can be divided into several groups of instructions. This chapter provides an overview of some of the instructions while the next chapter gives details on some more instructions. Later chapters discuss these instructions in more detail. The chapter concludes with a summary.

Introduction

Assembly language programs are created out of three different classes of statements. Statements in the first class tell the processor what to do. These statements are called *executable instructions*, or *instructions* for short. Each executable instruction consists of an *operation code* (*opcode* for short). Executable instructions cause the assembler to generate machine language instructions. As stated in Chapter 1, each executable statement typically generates one machine language instruction.

The second class of statements provides information to the assembler on various aspects of the assembly process. These instructions are called *assembler directives* or *pseudo-ops*. Assembler directives are nonexecutable and do not generate any machine language instructions.

The last class of statements, called *macros*, provide a sophisticated text substitution mechanism. Macros are discussed in detail in the next chapter.

Assembly language statements are entered one per line in the source file. All three classes of the assembly language statements use the same format:

```
[label]    mnemonic    [operands]    [;comment]
```

The fields in the square brackets are optional in some statements. As a result of this format, it is a common practice to align the fields to aid readability of assembly language programs. The assembler does not care about spaces between the fields.

Now let us look at some sample assembly language statements.

```
repeat:   inc      result   ;increment result by 1
```

The label `repeat` can be used to refer to this particular statement. The mnemonic `inc` indicates increment operation to be done on the data stored in memory at a location identified by `result`. Certain reserved words that have special meaning to the assembler are not allowed as labels. These include mnemonics such as `inc`.

The fields in a statement must be separated by at least one space or tab character. More spaces and tabs can be used at the programmer's discretion, but the assembler ignores them.

It is a good programming practice to use blank lines and spaces to improve the readability of assembly language programs. As a result, you rarely see in this book a statement containing all four fields in a single line. In particular, we almost always write labels on a separate line unless doing so destroys the program structure. Thus, our first example assembly language statement is written on two lines as

```
repeat:
     inc     result    ;increment result by 1
```

The NASM assembler provides several directives to reserve space for variables. These directives are discussed in the next section. Assembly language instructions typically require one or more operands. These operands can be at different locations. There are several different ways we can specify the location of the operands. These are referred to as the addressing modes. We introduce four simple addressing modes in this chapter. These addressing modes are sufficient to write simple but meaningful assembly language programs. Chapter 13 gives complete details on the addressing modes available in 16- and 32-bit modes. Following our discussion of the addressing modes, we give an overview of some of the instructions available in the IA-32 instruction set.

Starting with this chapter, we give several programming examples in each chapter. We give a simple example in the "Our First Example" section. A later "Illustrative Examples" section gives more examples. To understand the structure of these programs, you need to understand the information presented in Chapter 7. That chapter gives details about the structure of the assembly language programs presented in this book, the I/O routines we use, and how you can assemble and link them to create an executable file. If you have skipped that chapter, it is a good time to go back and review the material presented there.

Data Allocation

In high-level languages, allocation of storage space for variables is done indirectly by specifying the data types of each variable used in the program. For example, in C, the following declarations allocate different amounts of storage space for each variable.

```
char        response;   /* allocates 1 byte  */
int         value;      /* allocates 4 bytes */
float       total;      /* allocates 4 bytes */
double      temp;       /* allocates 8 bytes */
```

These variable declarations not only specify the amount of storage required, but also indicate how the stored bit pattern should be interpreted. As an example, consider the following two statements in C:

```
unsigned    value_1;
int         value_2;
```

Both variables use four bytes of storage. However, the bit pattern stored in them would be interpreted differently. For instance, the bit pattern (8FF08DB9H)

```
1000 1111 1111 0000 1000 1101 1011 1001
```

stored in the four bytes allocated for `value_1` is interpreted as representing $+2.4149 \times 10^9$, while the same bit pattern stored in `value_2` would be interpreted as -1.88006×10^9.

In the assembly language, allocation of storage space is done by the define assembler directive. The define directive can be used to reserve and initialize one or more bytes. However, no interpretation (as in a C variable declaration) is attached to the contents of these bytes. It is entirely up to the program to interpret the bit pattern stored in the space reserved for data.

The general format of the storage allocation statement for initialized data is

```
[variable-name] define-directive initial-value [,initial-value],···
```

The square brackets indicate optional items. The `variable-name` is used to identify the storage space allocated. The assembler associates an offset value for each variable name defined in the data segment. Note that no colon (:) follows the variable name (unlike a label identifying an executable statement).

The define directive takes one of the five basic forms:

```
DB    Define Byte        ; allocates 1 byte
DW    Define Word        ; allocates 2 bytes
DD    Define Doubleword  ; allocates 4 bytes
DQ    Define Quadword    ; allocates 8 bytes
DT    Define Ten Bytes   ; allocates 10 bytes
```

Let us look at some examples now.

```
sorted    DB    'y'
```

This statement allocates a single byte of storage and initializes it to character `y`. Our assembly language program can refer to this character location by its name `sorted`. We can also use numbers to initialize. For example,

```
sorted    DB    79H
```

or

```
sorted    DB    1111001B
```

is equivalent to

```
sorted    DB    'y'
```

Note that the ASCII value for y is 79H. The following data definition statement allocates two bytes of contiguous storage and initializes it to 25159.

```
value    DW    25159
```

The decimal value 25159 is automatically converted to its 16-bit binary equivalent (6247H). Since the processor uses the little-endian byte ordering (see Chapter 3), this 16-bit number is stored in memory as

```
 address:   x    x+1
contents:   47   62
```

You can also use negative values, as in the following example:

```
balance    DW    -29255
```

Since the 2's complement representation is used to store negative values, −29,255 is converted to 8DB9H and is stored as

```
 address:   x    x+1
contents:   B9   8D
```

The statement

```
total    DD    542803535
```

would allocate four contiguous bytes of memory and initialize it to 542803535 (205A864FH), as shown below:

```
 address:   x      x+1    x+2    x+3
contents:   4F     86     5A     20
```

Short and long floating-point numbers are represented using 32 or 64 bits, respectively (see Appendix A for details). We can use DD and DQ directives to assign real numbers, as shown in the following examples:

```
float1    DD    1.234
real2     DQ    123.456
```

Uninitialized Data

To reserve space for uninitialized data, we use RESB, RESW, and so on. Each reserve directive takes a single operand that specifies the number of units of space (bytes, words, . . .) to be reserved. There is a reserve directive for each define directive.

```
RESB    Reserve a Byte
RESW    Reserve a Word
RESD    Reserve a Doubleword
RESQ    Reserve a Quadword
REST    Reserve Ten Bytes
```

Here are some examples:

```
response    RESB    1
buffer      RESW    100
total       RESD    1
```

The first statement reserves a byte while the second reserves space for an array of 100 words. The last statement reserves space for a doubleword.

Multiple Definitions

Assembly language programs typically contain several data definition statements. For example, look at the following assembly language program fragment:

```
sort        DB      'y'         ; ASCII of y = 79H
value       DW      25159       ; 25159D = 6247H
total       DD      542803535   ; 542803535D = 205A864FH
```

When several data definition statements are used as above, the assembler allocates contiguous memory for these variables. The memory layout for these three variables is

address:	x	x+1	x+2	x+3	x+4	x+5	x+6
contents:	79	47	62	4F	86	5A	20
	sort	value		total			

Multiple data definitions can be abbreviated. For example, the following sequence of eight DB directives

```
message     DB      'W'
            DB      'E'
            DB      'L'
            DB      'C'
            DB      'O'
            DB      'M'
            DB      'E'
            DB      '!'
```

can be abbreviated as

```
message     DB      'W','E','L','C','O','M','E','!'
```

or even more compactly as

```
message     DB      'WELCOME!'
```

Here is another example showing how abbreviated forms simplify data definitions. The definition

```
message     DB      'B'
            DB      'y'
            DB      'e'
            DB      0DH
            DB      0AH
```

can be written as

```
message    DB    'Bye',0DH,0AH
```

Similar abbreviated forms can be used with the other define directives. For instance, a `marks` array of size 8 can be defined and initialized to zero by

```
marks    DW    0
         DW    0
         DW    0
         DW    0
         DW    0
         DW    0
         DW    0
         DW    0
```

which can be abbreviated as

```
marks    DW    0, 0, 0, 0, 0, 0, 0, 0
```

The initialization values of define directives can also be expressions as shown in the following example.

```
max_marks    DW    7*25
```

This statement is equivalent to

```
max_marks    DW    175
```

The assembler evaluates such expressions at assembly time and assigns the resulting value. Use of expressions to specify initial values is not preferred, because it affects the readability of programs. However, there are certain situations where using an expression actually helps clarify the code. In our example, if `max_marks` represents the sum of seven assignment marks where each assignment is marked out of 25 marks, it is preferable to use the expression 7 *25 rather than 175.

Multiple Initializations

In the previous example, if the class size is 90, it is inconvenient to define the array as described. The `TIMES` directive allows multiple initializations to the same value. Using `TIMES`, the `marks` array can be defined as

```
marks    TIMES  8  DW  0
```

The `TIMES` directive is useful in defining arrays and tables.

Symbol Table

When we allocate storage space using a data definition directive, we usually associate a symbolic name to refer to it. The assembler, during the assembly process, assigns an offset value for each symbolic name. For example, consider the following data definition statements:

```
.DATA
value     DW    0
sum       DD    0
marks     TIMES  10  DW    0
message   DB    'The grade is:',0
char1     DB    ?
```

As noted before, the assembler assigns contiguous memory space for the variables. The assembler also uses the same ordering of variables that is present in the source code. Then, finding the offset value of a variable is a simple matter of counting the number of bytes allocated to all the variables preceding it. For example, the offset value of `marks` is 6 because `value` and `sum` are allocated 2 and 4 bytes, respectively. The symbol table for the data segment is shown below:

Name	Offset
`value`	0
`sum`	2
`marks`	6
`message`	26
`char1`	40

Where Are the Operands

Most assembly language instructions require operands. There are several ways to specify the location of the operands. These are called the *addressing modes*. This section is a brief overview of some of the addressing modes required to do basic assembly language programming. A complete discussion is given in Chapter 13.

An operand required by an instruction may be in any one of the following locations:

- in a register internal to the processor;
- in the instruction itself;
- in main memory (usually in the data segment);
- at an I/O port (discussed in Chapter 20).

Specification of an operand that is in a register is called *register addressing mode*, while *immediate addressing mode* refers to specifying an operand that is part of the instruction. Several addressing modes are available to specify the location of an operand residing in memory. The motivation for providing these addressing modes comes from the perceived need to efficiently support high-level language constructs (see Chapter 13 for details).

Register Addressing Mode

In this addressing mode, processor's internal registers contain the data to be manipulated by the instruction. For example, the instruction

```
mov     EAX,EBX
```

requires two operands and both are in the processor registers. The syntax of the `mov` instruction is

```
mov     destination,source
```

The `mov` instruction copies contents of `source` to `destination`. The contents of `source` are not destroyed. Thus,

```
mov     EAX,EBX
```

copies the contents of the EBX register into the EAX register. Note that the original contents of EAX are lost. In this example, the `mov` instruction is operating on 32-bit data. However, it can also work on 16- and 8-bit data, as shown below:

```
mov     BX,CX
mov     AL,CL
```

Register-addressing mode is the most efficient way of specifying operands because they are within the processor and, therefore, no memory access is required.

Immediate Addressing Mode

In this addressing mode, data is specified as part of the instruction itself. As a result, even though the data is in memory, it is located in the code segment, not in the data segment. This addressing mode is typically used in instructions that require at least two data items to manipulate. In this case, this mode can only specify the source operand and immediate data is always a constant, either given directly or via the EQU directive (discussed in the next chapter). Thus, instructions typically use another addressing mode to specify the destination operand.

In the following example,

```
mov     AL,75
```

the source operand 75 is specified in the immediate addressing mode and the destination operand is specified in the register addressing mode. Such instructions are said to use mixed-mode addressing.

The remainder of the addressing modes we discuss here deal with operands that are located in the data segment. These are called the *memory addressing modes*. We discuss two memory addressing modes here: *direct* and *indirect*. The remaining memory addressing modes are discussed in Chapter 13.

Direct Addressing Mode

Operands specified in a memory-addressing mode require access to the main memory, usually to the data segment. As a result, they tend to be slower than either of the two previous addressing modes.

Recall that to locate a data item in the data segment, we need two components: the segment start address and an offset value within the segment. The start address of the segment is typically found in the DS register. Thus, various memory-addressing modes differ in the way the offset value of the data is specified. The offset value is often called the *effective address*.

In the direct addressing mode, the offset value is specified directly as part of the instruction. In an assembly language program, this value is usually indicated by the variable name of the data item. The assembler translates this name into its associated offset value during the assembly process. To facilitate this translation, assembler maintains a symbol table. As discussed before, symbol table stores the offset values of all variables in the assembly language program.

This addressing mode is the simplest of all the memory addressing modes. A restriction associated with the memory addressing modes is that these can be used to specify only one operand. The examples that follow assume the following data definition statements in the program.

```
response  DB     'Y'          ; allocates a byte, initializes to Y
table1    TIMES 20 DW 0       ; allocates 40 bytes, initializes to 0
name1     DB     'Jim Ray'    ; 7 bytes are initialized to Jim Ray
```

Here are some examples of the `mov` instruction:

```
mov     AL,[response]    ; copies Y into AL register
mov     [response],'N'   ; N is written into response
mov     [name1],'K'      ; write K as the first character of name1
mov     [table1],56      ; 56 is written in the first element
```

This last statement is equivalent to `table1[0] = 56` in the C language.

Indirect Addressing Mode

The direct addressing mode can be used in a straightforward way but is limited to accessing simple variables. For example, it is not useful in accessing the second element of `table1` as in the following C statement:

```
table1[1] = 99
```

The indirect addressing mode remedies this deficiency. In this addressing mode, the offset or effective address of the data is in one of the general registers. For this reason, this addressing mode is sometimes referred to as the register indirect addressing mode.

The indirect addressing mode is not required for variables having only a single element (e.g., `response`). But for variables like `table1` containing several elements, the starting address of the data structure can be loaded into, say, the EBX register and then EBX acts as a pointer to an element in `table1`. By manipulating the contents of the EBX register, we can access different elements of `table1`.

The following code assigns 100 to the first element and 99 to the second element of `table1`. Note that EBX is incremented by 2 because each element of `table1` requires two bytes.

```
mov     EBX,table1       ; copy address of table1 to EBX
mov     [EBX],100        ; table1[0] = 100
add     EBX,2            ; EBX = EBX + 2
mov     [EBX],99         ; table1[1] = 99
```

Chapter 13 discusses other memory addressing modes that can perform this task more efficiently.

The effective address can also be loaded into a register by the `lea` (load effective address) instruction. The syntax of this instruction is

```
lea     register,source
```

Thus,

```
lea     EBX,[table1]
```

can be used in place of the

```
mov     EBX,table1
```

instruction. The difference is that `lea` computes the offset values at run time, whereas the `mov` version resolves the offset value at assembly time. For this reason, we will try to use the latter whenever possible. However, `lea` offers more flexibility as to the types of `source` operands. For example, we can write

```
lea     EBX,[array+ESI]
```

to load EBX with the address of an element of `array` whose index is in the ESI register. However, we cannot write

```
mov     EBX,[array+ESI]      ; illegal
```

as the contents of ESI are known at assembly time.

Overview of Assembly Language Instructions

This section briefly reviews some of the remaining assembly language instructions. The discussion presented here would provide sufficient exposure to the assembly language so that you can write meaningful assembly language programs.

The MOV Instruction

We have already introduced the `mov` instruction, which requires two operands and has the syntax

```
mov     destination,source
```

The data is copied from `source` to `destination` and the `source` operand remains unchanged. Both operands should be of the same size. The `mov` instruction can take one of the following five forms:

```
mov     register,register
mov     register,immediate
mov     memory,immediate
mov     register,memory
mov     memory,register
```

There is no move instruction to transfer data from memory to memory. However, as we will see in Chapter 17, memory-to-memory data transfer is possible using the string instructions.

Here are some example `mov` statements:

```
mov     AL,[response]
mov     DX,[table1]
mov     [response],'N'
mov     [name1+4],'K'
```

Ambiguous Moves Moving immediate value into memory sometimes causes ambiguity as to the type of operand. For example, in the statements

```
mov     EBX,[table1]
mov     ESI,[name1]
mov     [EBX],100
mov     [ESI],100
```

it is not clear, for example, whether a word (2 bytes) or a byte equivalent of 100 is to be written in the memory. We can clarify this ambiguity by using a type specifier. For example, we can use WORD type specifier to identify a word operation and BYTE for a byte operation. Using the type specifiers, we can write

```
mov     WORD [EBX],100
mov     BYTE [ESI],100
```

We can also write these statements as

```
mov     [EBX],WORD 100
mov     [ESI],BYTE 100
```

Some of the type specifiers available are given below:

Type specifier	Bytes addressed
BYTE	1
WORD	2
DWORD	4
QWORD	8
TBYTE	10

Simple Arithmetic Instructions

The instructin set provides several instructions to perform simple arithmetic operations. In this section, we describe a few instructions to perform addition and subtraction. We defer a full discussion until Chapter 14.

The INC and DEC Instructions These instructions can be used to either increment or decrement the operands by one. The `inc` (INCrement) instruction adds one to its operand and the `dec` (DECrement) instruction subtracts one from its operand. Both instructions require a single operand. The operand can be either in a register or in memory. It does not make sense to use an immediate operand such as `inc 55` or `dec 109`.

The general format of these instructions is

```
inc     destination
dec     destination
```

where `destination` may be an 8-, 16- or 32-bit operand.

```
inc     EBX         ; increment 32-bit register
dec     DL          ; decrement 8-bit register
```

Let us assume that EBX and DL have 1057H and 5AH, respectively. After executing the above two instructions, EBX and DL would have 1058H and 59H, respectively. If the initial values of EBX and DL are FFFFH and 00H, after executing the two statements the contents of EBX and DL are changed to 0000H and FFH, respectively.

Now consider the following program:

```
.DATA
count    DW    0
value    DB    25

.CODE
      inc     [count]        ;unambiguous
      dec     [value]        ;unambiguous
      move    EBX,count
      inc     [EBX]          ;ambiguous
      mov     ESI,value
      dec     [ESI]          ;ambiguous
```

In the above example,

```
inc     [count]
dec     [value]
```

are unambiguous because the assembler knows from the definition of `count` and `value` that they are WORD and BYTE operands. However,

```
inc     [EBX]
dec     [ESI]
```

are ambiguous because EBX and ESI merely point to an object in memory but the actual object type (whether a WORD, BYTE, etc.) is not clear. We have to use a type specifier to clarify, as shown below:

```
inc     WORD [EBX]
dec     BYTE [ESI]
```

The ADD Instruction The `add` instruction can be used to add two 8-, 16- or 32-bit operands. The syntax is

```
add     destination,source
```

As with the `mov` instruction, `add` can also take the five basic forms depending on how the two operands are specified. The semantics of the `add` instruction are

```
destination = destination + source
```

Some examples of `add` instruction are givn in Table 9.1. In general,

```
inc     EAX
```

is preferred to

```
add     EAX,1
```

as the `inc` version improves readability and requires less memory space to store the instruction. However, both instructions execute at the same speed.

Table 9.1 Some examples of the `add` instruction

Instruction	Before add		After add
	source	destination	destination
`add AX,DX`	`DX = AB62H`	`AX = 1052H`	`AX = BBB4H`
`add BL,CH`	`BL = 76H`	`CH = 27H`	`BL = 9DH`
`add value,10H`	—	`value = F0H`	`value = 00H`
`add DX,count`	`count = 3746H`	`DX = C8B9H`	`DX = FFFFH`

Table 9.2 Some examples of the `sub` instruction

instruction	Before sub		After sub
	source	destination	destination
`sub AX,DX`	`DX = AB62H`	`AX = 1052H`	`AX = 64F0H`
`sub BL,CH`	`CH = 27H`	`BL = 76H`	`BL = 4FH`
`sub value,10H`	—	`value = F0H`	`value = E0H`
`sub DX,count`	`count = 3746H`	`DX = C8B9H`	`DX = 9173H`

The SUB and CMP Instructions The `sub` (SUBtract) instruction can be used to subtract two 8-, 16- or 32-bit numbers. The syntax is

```
sub     destination,source
```

The `source` operand is subtracted from the `destination` operand and the result is placed in the `destination`.

```
destination = destination - source
```

Table 9.2 gives examples of the `sub` instruction.

The `cmp` (CoMPare) instruction is used to compare two operands (equal, not equal, and so on). The `cmp` instruction performs the same operation as the `sub` except that the result of subtraction is not saved. Thus, `cmp` does not disturb the source and destination operands. The `cmp` instruction is typically used in conjunction with a conditional jump instruction for decision making. This is the topic of the next section.

Conditional Execution

The instruction set has several branching and looping instructions to construct programs that require conditional execution. In this section, we discuss a subset of these instructions. A detailed discussion is in Chapter 15.

Unconditional Jump The unconditional jump instruction `jmp`, as its name implies, tells the processor that the next instruction to be executed is located at the label that is given as part of the instruction. This jump instruction has the form

```
jmp     label
```

where `label` identifies the next instruction to be executed. The following example

```
        mov     EAX,1
inc_again:
        inc     EAX
        jmp     inc_again
        mov     EBX,EAX
            . . .
```

results in an infinite loop incrementing EAX repeatedly. The instruction

```
mov     EBX,EAX
```

and all the instructions following it are never executed!

From this example, the `jmp` instruction appears to be useless. Later, we show some examples that illustrate the use of this instruction.

Conditional Jump In conditional jump instructions, program execution is transferred to the target instruction only when the specified condition is satisfied. The general format is

```
j<cond>   label
```

where `<cond>` identifies the condition under which the target instruction at `label` should be executed. Usually, the condition being tested is the result of the last arithmetic or logic operation. For example, the following code

```
read_char:
        mov     DL,0
          . . .
        (code for reading a character into AL)
          . . .
        cmp     AL,0DH        ;compare the character to CR
        je      CR_received   ;if equal, jump to CR_received
        inc     CL            ;otherwise, increment CL and
        jmp     read_char     ;go back to read another
                              ;character from keyboard
CR_received:
        mov     DL,AL
          . . .
```

reads characters from the keyboard until the carriage return (CR) key is pressed. The character count is maintained in the CL register. The two instructions

```
cmp     AL,0DH        ;0DH is ASCII for carriage return
je      CR_received   ;je stands for jump on equal
```

perform the required conditional execution. How does the processor remember the result of the previous `cmp` operation when it is executing the `je` instruction? One of the purposes of the flags register is to provide such short-term memory between instructions. Let us look at the actions taken by the processor in executing these two instructions.

Remember that the `cmp` instruction subtracts 0DH from the contents of the AL register. While the result is not saved anywhere, the operation sets the zero flag (ZF = 1) if the two operands are the same. If not, ZF = 0. The zero flag retains this value until another instruction that affects ZF is executed. Note that not all instructions affect all the flags. In particular, the `mov` instruction does not affect any of the flags.

Thus, at the time of the `je` instruction execution, the processor checks ZF and program execution jumps to the labeled instruction if and only if ZF = 1. To cause the jump, the processor loads the EIP register with the target instruction address. Recall that the EIP register always points to the next instruction to be executed. Therefore, when the input character is CR, instead of fetching the instruction

```
inc     CL
```

it will fetch the

```
mov     DL,AL
```

instruction. Here are some of the conditions tested by the conditional jump instructions:

`je`	jump if equal
`jg`	jump if greater
`jl`	jump if less
`jge`	jump if greater or equal
`jle`	jump if less than or equal
`jne`	jump if not equal

Conditional jumps can also test the values of flags. Some examples are

`jz`	jump if zero (i.e., if ZF = 1)
`jnz`	jump if not zero (i.e., if ZF = 0)
`jc`	jump if carry (i.e., if CF = 1)
`jnc`	jump if not carry (i.e., if CF = 0)

Example 9.1 *Conditional jump examples.*
Consider the following code.

```
go_back:
      inc     AL
        . . .
        . . .
      cmp     AL,BL
      statement_1
      mov     BL,77H
```

Table 9.3 shows the actions taken depending on `statement_1`. □

Table 9.3 Some conditional jump examples

statement_1	AL	BL	Action taken
je go_back	56H	56H	Program control is transferred to inc AL
jg go_back	56H	55H	Program control is transferred to inc AL
jg go_back jl go_back	56H	56H	No jump; executes mov BL,77H
jle go_back jge go_back	56H	56H	Program control is transferred to inc AL
jne go_back jg go_back jge go_back	27H	26H	Program control is transferred to inc AL

These conditional jump instructions assume that the operands compared were treated as signed numbers. There is another set of conditional jump instructions for operands that are unsigned numbers. But until these instructions are discussed in Chapter 15, these six conditional jump instructions are sufficient for writing simple assembly language programs.

When you use these conditional jump instructions, your assembler sometimes complains that the destination of the jump is "out of range". If you find yourself in this situation, you can use the trick described on page 326.

Iteration Instruction

Iteration can be implemented with jump instructions. For example, the following code can be used to execute <loop body> 50 times.

```
        mov     CL,50
repeat1:
        <loop body>
        dec     CL
        jnz     repeat1  ;jumps back to repeat1 if CL is not 0
           . . .
           . . .
```

The instruction set, however, includes a group of `loop` instructions to support iteration. Here we describe the basic `loop` instruction. The syntax of this instruction is

```
loop    target
```

where `target` is a label that identifies the target instruction as in the jump instructions.

This instruction assumes that the ECX register contains the loop count. As part of executing the `loop` instruction, it decrements the ECX register and jumps to the `target` instruction if ECX $\neq 0$. Using this instruction, we can write the previous example as

```
        mov     ECX,50
repeat1:
        <loop body>
        loop    repeat1
            . . .
            . . .
```

Logical Instructions

The instruction set provides several logical instructions including `and`, `or`, `xor` and `not`. The syntax of these instructions is

```
and     destination,source
or      destination,source
xor     destination,source
not     destination
```

The first three are binary operators and perform bitwise `and`, `or` and `xor` logical operations, respectively. The `not` is a unary operator that performs bitwise complement operation. Truth tables for the logical operations `and`, `or` and `xor` are shown in Table 9.4. Some examples that explain the operation of these logical instructions are shown in Table 9.5. In this table, all numbers are expressed in binary.

Logical instructions set some of the flags and therefore can be used in conditional jump instructions to implement high-level language decision structures in the assembly language. Until we fully discuss the flags in Chapter 14, the following usage should be sufficient to write and understand the assembly language programs.

In the following example, we test the least significant bit of the data in the AL register, and the program control is transferred to the appropriate code depending on the value of this bit.

```
            . . .
        and     AL,01H
        je      bit_is_zero
        <code to be executed
         when the bit is one>
        jmp     skip1
bit_is_zero:
        <code to be executed
         when the bit is zero>
skip1:
        <rest of the code>
```

To understand how the jump is effective in this example, let us assume that AL = 10101110B. The instruction

```
and     AL,01H
```

would make the result 00H and is stored in the AL register. At the same time, the logical operation sets the zero flag (i.e., ZF = 1) because the result is zero. Recall that `je` tests the ZF and jumps to the target location if ZF = 1. In this example, it is more appropriate to use `jz` (jump if zero). Thus,

```
jz      bit_is_zero
```

can replace the

Table 9.4 Truth tables for the logical operations

`and` operation

Input bits		Output bit
source b_i	destination b_i	destination b_i
0	0	0
0	1	0
1	0	0
1	1	1

`or` operation

Input bits		Output bit
source b_i	destination b_i	destination b_i
0	0	0
0	1	1
1	0	1
1	1	1

`xor` operation

Input bits		Output bit
source b_i	destination b_i	destination b_i
0	0	0
0	1	1
1	0	1
1	1	0

```
je      bit_is_zero
```

instruction. In fact, the conditional jump `je` is an alias for `jz`.

A problem with using the `and` instruction for testing, as used in the previous example, is that it modifies the destination operand. For instance, in the last example,

```
and     AL,01H
```

changes the contents of AL to either 0 or 1 depending on whether the least significant bit is 0 or 1, respectively. To avoid this problem, a `test` instruction is provided. The syntax is

Table 9.5 Some logical instruction examples

		and AL,BL	or AL,BL	xor AL,BL	not AL
AL	BL	AL	AL	AL	AL
10101110	11110000	10100000	11111110	01011110	01010001
01100011	10011100	00000000	11111111	11111111	10011100
11000110	00000011	00000010	11000111	11000101	00111001
11110000	00001111	00000000	11111111	11111111	00001111

```
test    destination,source
```

The `test` instruction performs logical bitwise **and** operation like the `and` instruction except that the source and destination operands are not modified. However, `test` sets the flags just like the `and` instruction. Therefore, we can use

```
test    AL,01H
```

instead of

```
and     AL,01H
```

in the last example.

Our First Program

This is a simple program that adds up to 10 integers and outputs the sum. The program shown below follows the assembly language template given in Chapter 7 (see page 155). The program reads up to 10 integers from the user using `GetLInt` on line 20. Each input integer is read as a long integer into the EDX register. The maximum number of input values is enforced by the `loop` instruction on line 28. The loop iteration count is initialized to 10 in ECX on line 16. The user can terminate the input earlier by entering a zero. Each input value is compared with zero (line 21) and if it is equal to zero, the conditional branch instruction (`je`) on line 22 terminates the read loop. When the read loop terminates, the sum in EAX is output using `PutLInt` on line 32.

Program 9.1 An example program to find the sum of a set of integers

```
1:  ;Adds a set of integers                          ADDITION.ASM
2:  ;
3:  ;        Objective: To find the sum of a set of integers.
4:  ;            Input: Requests integers from the user.
5:  ;           Output: Outputs the sum of the input numbers.
6:  %include  "io.mac"
7:
```

```
 8:  .DATA
 9:  input_prompt   db  "Please enter at most 10 numbers: ",0
10:  end_msg        db  "No more numbers? Enter 0 to end: ",0
11:  sum_msg        db  "The sum is: ",0
12:
13:  .CODE
14:       .STARTUP
15:       PutStr  input_prompt  ; prompt for input numbers
16:       mov     ECX,10        ; loop count = 10
17:       sub     EAX,EAX       ; sum = 0
18:
19:  read_loop:
20:       GetLInt EDX           ; read the input number
21:       cmp     EDX,0         ; is it zero?
22:       je      reading_done  ; if yes, stop reading input
23:       add     EAX,EDX
24:       cmp     ECX,1         ; if 10 numbers are input
25:       je      skip_msg      ; skip displaying end_msg
26:       PutStr  end_msg
27:  skip_msg:
28:       loop    read_loop
29:
30:  reading_done:
31:       PutStr  sum_msg
32:       PutLInt EAX           ; write the sum
33:       nwln
34:       .EXIT
```

Note that after reading each input value, the program displays "No more numbers? Enter 0 to end:" message to inform the user of the other termination condition. However, if 10 numbers have been read, this message is skipped. This skipping is implemented by the code on lines 24 and 25.

Another point to note is that we used the loop count directly to initialize the ECX register on line 16. However, from the program maintenance point of view, it is better if we define this as a constant using the EQU directive, which is discussed in the next chapter.

Illustrative Examples

This section presents several examples that illustrate the use of the assembly language instructions discussed in this chapter. In order to follow these examples, you should be able to understand the difference between binary values and character representations. For example, when using a byte to store a number, number 5 is stored as

```
00000101B
```

On the other hand, character 5 is stored as

```
00110101B
```

Character manipulation is easier if you understand this difference and the key characteristics of ASCII, as discussed in Appendix A.

Example 9.2 *Conversion of lowercase letters to uppercase.*
This program demonstrates how indirect addressing can be used to access elements of an array. It also illustrates how character manipulation can be used to convert lowercase letters to uppercase. The program receives a character string from the user and converts all lowercase letters to uppercase and displays the string. Characters other than the lowercase letters are not changed in any way. The pseudocode of Program 9.2 is as follows:

```
main()
    display prompt message
    read input string
    index := 0
    char := string[index]
    while (char ≠ NULL)
        if ((char ≥ 'a') AND (char ≤ 'z'))
        then
            char := char + 'A' − 'a'
        end if
        display char
        index := index + 1
        char := string[index]
    end while
end main
```

You can see from Program 9.2 that the compound **if** condition requires two `cmp` instructions (lines 27 and 29). Also the program uses the EBX register in indirect addressing mode and always holds the pointer value of the character to be processed. In Chapter 13 we will see a better way of accessing the elements of an array. The end of the string is detected by

```
cmp     AL,0        ; check if AL is NULL
je      done
```

and is used to terminate the **while** loop (lines 25 and 26).

Program 9.2 Conversion to uppercase by character manipulation

```
 1:  ;Uppercase conversion of characters            TOUPPER.ASM
 2:  ;
 3:  ;        Objective: To convert lowercase letters to
 4:  ;                   corresponding uppercase letters.
 5:  ;            Input: Requests a char. string from the user.
 6:  ;           Output: Prints the input string in uppercase.
 7:  %include "io.mac"
 8:
 9:  .DATA
10:  name_prompt    db  "Please type your name: ",0
11:  out_msg        db  "Your name in capitals is: ",0
12:
13:  .UDATA
14:  in_name        resb  31
```

```
15:
16:  .CODE
17:       .STARTUP
18:       PutStr  name_prompt     ; request character string
19:       GetStr  in_name,31      ; read input character string
20:
21:       PutStr  out_msg
22:       mov     EBX,in_name     ; EBX = pointer to in_name
23:  process_char:
24:       mov     AL,[EBX]        ; move the char. to AL
25:       cmp     AL,0            ; if it is the NULL character
26:       je      done            ; conversion done
27:       cmp     AL,'a'          ; if (char < 'a')
28:       jl      not_lower_case  ; not a lowercase letter
29:       cmp     AL,'z'          ; if (char > 'z')
30:       jg      not_lower_case  ; not a lowercase letter
31:  lower_case:
32:       add     AL,'A'-'a'      ; convert to uppercase
33:  not_lower_case:
34:       PutCh   AL              ; write the character
35:       inc     EBX             ; EBX points to the next char.
36:       jmp     process_char    ; go back to process next char.
37:  done:
38:       nwln
39:       .EXIT
```

Example 9.3 *Sum of the individual digits of a number.*
This last example shows how decimal digits can be converted from their character representations to the equivalent binary. The program receives a number (maximum 10 digits) and displays the sum of the individual digits of the input number. For example, if the input number is 45213, the program displays 15. Since ASCII assigns a special set of contiguous values to the digit characters, it is straightforward to get their numerical value (as discussed in Appendix A). All we have to do is to mask off the upper half of the byte, as is done in Program 9.3 (line 28) by

```
and     AL,0FH
```

Alternatively, we can also subtract the character code for 0

```
sub     AL,'0'
```

instead of masking the upper half byte. For the sake of brevity, we leave writing the pseudocode of Program 9.3 as an exercise.

Program 9.3 Sum of individual digits of a number

```
1:  ;Add individual digits of a number                ADDIGITS.ASM
2:  ;
3:  ;        Objective: To find the sum of individual digits of
```

```
;                    a given number. Shows character to binary
;                    conversion of digits.
;             Input: Requests a number from the user.
;            Output: Prints the sum of the individual digits.
%include  "io.mac"

.DATA
number_prompt  db  "Please type a number (<11 digits): ",0
out_msg        db  "The sum of individual digits is: ",0

.UDATA
number         resb  11

.CODE
     .STARTUP
     PutStr  number_prompt ; request an input number
     GetStr  number,11     ; read input number as a string

     mov     EBX,number    ; EBX = address of number
     sub     DX,DX         ; DX = 0 -- DL keeps the sum
repeat_add:
     mov     AL,[EBX]      ; move the digit to AL
     cmp     AL,0          ; if it is the NULL character
     je      done          ;  sum is done
     and     AL,0FH        ; mask off the upper 4 bits
     add     DL,AL         ; add the digit to sum
     inc     EBX           ; update EBX to point to next digit
     jmp     repeat_add
done:
     PutStr  out_msg
     PutInt  DX            ; write sum
     nwln
     .EXIT
```

Summary

The structure of the stand-alone assembly language program is described in Chapter 7. In this chapter, we presented basics of the assembly language programming. We discussed two types of assembly language statements: (a) Executable statements that instruct the CPU as to what to do; (b) Assembler directives that facilitate the assembly process.

We have discussed the assembler directives to reserve space for variables. For initialized variables, we can use a define directive (DB, DW, and so on). To reserve space for uninitialized data, we use RESB, RESW, and so on. The TIMES directive can be used for multiple initializations.

We introduced some simple addressing modes to specify the location of the operands. The register addressing mode specifies the operands located in a processor register. The immediate addressing mode is used to specify constants. The remaining addressing modes specify the operands located in the memory. We discussed two memory addressing modes—direct and indirect. The remaining addressing modes are discussed in Chapter 13.

The instruction set consists of several groups of instructions—arithmetic, logical, shift, and so on. We presented a few instructions in each group so that we can write meaningful assembly language programs. We will introduce some more instructions in the next chapter.

10

More on Assembly Language

This chapter continues the assembly language overview from the last chapter. After the introduction, we discuss the data exchange and translate instructions. Then we describe the assembler directives to define constants—numeric as well as string constants. Next we discuss macros supported by NASM. Macros provide a sophisticated text substitution mechanism and are useful in program maintenance. NASM allows definition of macros with parameters. We use several examples to illustrate the application of the instructions discussed here. The performance advantage of the translation instruction is demonstrated in the last section. The chapter concludes with a summary.

Introduction

As mentioned in the last chapter, three types of statements are used in assembly language programs: instructions, assembler directives, and macros. We have discussed several instructions and directives in the last chapter. For example, we used assembler directives to allocate storage space for variables. This chapter continues our discussion from the last chapter and covers a few more processor instructions, some assembler directives to define constants, and macros.

We present some more instructions of the IA-32 instruction set. We describe two instructions for data exchange and translation: `xchg` and `xlat`. The `xchg` instruction exchanges two data values. These values can be 8, 16, or 32 bit values. This instruction is particularly useful in sort applications. The `xlat` instruction translates a byte value. We also discuss the shift and rotate family of instructions. We illustrate the use of these instructions by means of several examples.

Next we discuss the NASM directives to define constants. If you have used the C language, you already know the utility of `%define` in program maintenance. We describe three NASM directives: `EQU`, `%assign` and `%define`. The `EQU` can be used to define numeric constants. This directive does not allow redefinition. For example, the following assembler directive defines a constant `CR`. The ASCII carriage-return value is assigned to it by the `EQU` directive.

```
CR      EQU     0DH         ;carriage-return character
```

As mentioned, we cannot redefine CR to a different value later in the program. The %assign can also be used to define numeric constants. However, it allows redefinition. The %define directive can be used to define both string and numeric constants.

The last topic introduces the macros supported by the NASM assembler. Macros are used as a shorthand notation for a group of statements. Macros permit the assembly language programmer to name a group of statements and refer to the group by the macro name. During the assembly process, each macro is replaced by the group of statements that it represents and assembled in place. This process is referred to as *macro expansion*. We use macros to provide the basic input and output capabilities to our stand-alone assembly language programs.

Data Exchange and Translate Instructions

This section describes the data exchange (xchg) and translation (xlat) instructions. Other data transfer instructions such as movsx and movzx are discussed in Chapter 14.

The XCHG Instruction

The xchg instruction exchanges 8-, 16-, or 32-bit source and destination operands. The syntax is similar to that of the mov instruction. Some examples are

```
xchg    EAX,EDX
xchg    [response],CL
xchg    [total],DX
```

As in the mov instruction, both operands cannot be located in memory. Note that this restriction is applicable to most instructions. Thus,

```
xchg    [response],[name1]      ; illegal
```

is invalid. The xchg instruction is convenient because we do not need a third register to hold a temporary value in order to swap two values. For example, we need three mov instructions

```
mov     ECX,EAX
mov     EAX,EDX
mov     EDX,ECX
```

to perform xchg EAX,EDX. This instruction is especially useful in sorting applications. It is also useful to swap the two bytes of 16-bit data to perform conversions between little-endian and big-endian forms, as in the following example:

```
xchg    AL,AH
```

Another instruction, bswap, can be used to perform such conversions on 32-bit data. The format is

```
bswap  register
```

This instruction works only on the data located in a 32-bit register.

The XLAT Instruction

The `xlat` (translate) instruction can be used to perform character translation. The format of this instruction is shown below:

```
xlatb
```

To use this instruction, the EBX register must to be loaded with the starting address of the translation table and AL must contain an index value into the table. The `xlat` instruction adds contents of AL to EBX and reads the byte at the resulting address. This byte replaces the index value in the AL register. Since the 8-bit AL register provides the index into the translation table, the number of entries in the table is limited to 256. An application of `xlat` is given in Example 10.6.

Shift and Rotate Instructions

This section describes some of the shift and rotate instructions supported by the instruction set. The remaining instructions in this family are discussed in Chapter 16.

Shift Instructions

The instruction set provides several shift instructions. We discuss the following two instructions here: `shl` (SHift Left) and `shr` (SHift Right). The `shl` instruction can be used to left shift a destination operand. Each shift to the left by one bit position causes the leftmost bit to move to the carry flag (CF). The vacated rightmost bit is filled with a zero. The bit that was in CF is lost as a result of this operation.

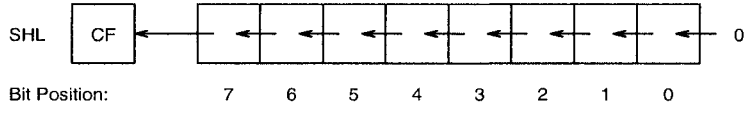

The `shr` instruction works similarly but shifts bits to the right as shown below:

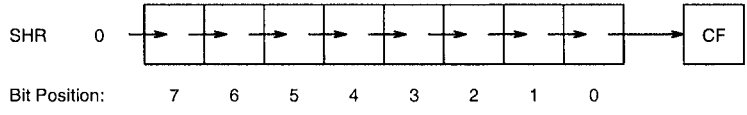

The general formats of these instructions are

```
shl  destination,count      shr  destination,count
shl  destination,CL         shr  destination,CL
```

The destination can be an 8-, 16- or 32-bit operand stored either in a register or in memory. The second operand specifies the number of bit positions to be shifted. The first format specifies the shift count directly. The shift `count` can range from 0 to 31. The second format can be used to indirectly specify the shift count, which is assumed to be in the CL register. The CL register contents are not changed by either the `shl` or `shr` instructions. In general, the first format is faster!

Even though the shift count can be between 0 and 31, it does not make sense to use count values of zero or greater than 7 (for an 8-bit operand), or 15 (for a 16-bit operand), or 31 (for a

Table 10.1 Some examples of the shift instructions

	Before shift	After shift	
Instruction	AL or AX	AL or AX	CF
`shl AL,1`	1010 1110	0101 1100	1
`shr AL,1`	1010 1110	0101 0111	0
`mov CL,3` `shl AL,CL`	0110 1101	0110 1000	1
`mov CL,5` `shr AX,CL`	1011 1101 0101 1001	0000 0101 1110 1010	1

32-bit operand). As indicated, shift count cannot be greater than 31. If a greater value is specified, only the least significant 5 bits of the number are taken as the shift count. Table 10.1 shows some examples of the `shl` and `shr` instructions.

The following code shows another way of testing the least significant bit of the data in the AL register.

```
          . . .
          . . .
      shr    AL,1
      jnc    bit_is_zero
      <code to be executed
       when the bit is one>
      jmp    skip1
bit_is_zero:
      <code to be executed
       when the bit is zero>
skip1:
      <rest of the code>
          . . .
          . . .
```

If the value in the AL register has a 1 in the least significant bit position, this bit will be in the carry flag after the `shr` instruction has been executed. Then we can use a conditional jump instruction that tests the carry flag. Recall that the `jc` (jump if carry) would cause the jump if CF = 1 and `jnc` (jump if no carry) causes jump only if CF = 0.

Rotate Instructions

A drawback with the shift instructions is that the bits shifted out are lost. There may be situations where we want to keep these bits. The rotate family of instructions provides this facility. These instructions can be divided into two types: rotate without involving the carry flag, or through the carry flag. We will briefly discuss these two types of instructions next.

Table 10.2 Some examples of the rotate instructions

Instruction	Before execution	After execution	
	AL or AX	AL or AX	CF
`rol AL,1`	1010 1110	0101 1101	1
`ror AL,1`	1010 1110	0101 0111	0
`mov CL,3` `rol AL,CL`	0110 1101	0110 1011	1
`mov CL,5` `ror AX,CL`	1011 1101 0101 1001	1100 1101 1110 1010	1

Rotate Without Carry There are two instructions in this group:

`rol` (ROtate Left)
`ror` (ROtate Right)

The format of these instructions is similar to the shift instructions and is given below:

```
rol    destination,count        ror    destination,count
rol    destination,CL           ror    destination,CL
```

The `rol` instruction performs left rotation with the bits falling off on the left placed on the right side, as shown below:

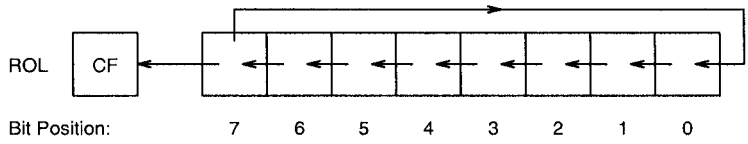

The `ror` instruction performs right rotation as shown below:

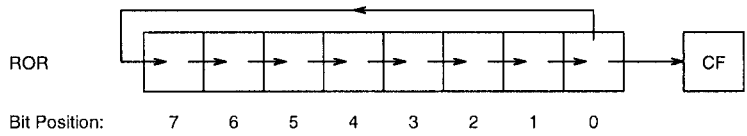

For both of these instructions, the CF will catch the last bit rotated out of the destination. The examples in Table 10.2 illustrate the rotate operation.

Rotate Through Carry The instructions

`rcl` (Rotate through Carry Left)
`rcr` (Rotate through Carry Right)

Table 10.3 Some rotate through carry examples

Instruction	Before execution		After execution	
	AL or AX	CF	AL or AX	CF
`rcl AL,1`	1010 1110	0	0101 1100	1
`rcr AL,1`	1010 1110	1	1101 0111	0
`mov CL,3` `rcl AL,CL`	0110 1101	1	0110 1101	1
`mov CL,5` `rcr AX,CL`	1011 1101 0101 1001	0	1001 0101 1110 1010	1

include the carry flag in the rotation process. That is, the bit that is rotated out at one end goes into the carry flag and the bit that was in the carry flag is moved into the vacated bit, as shown below:

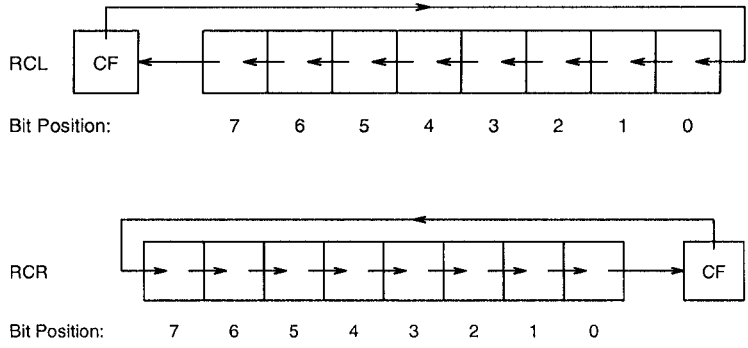

Some examples of the `rcl` and `rcr` instructions are given in Table 10.3.

The `rcl` and `rcr` instructions provide flexibility in bit rearranging. Furthermore, these are the only two instructions that take the carry flag bit as an input. This feature is useful in multiword shifts. As an example, suppose that we want to right shift the 64-bit number stored in EDX:EAX (the lower 32 bits are in EAX) by one bit position. This can be done by

```
shr     EDX,1
rcr     EAX,1
```

The `shr` instruction moves the least significant bit of EDX into the carry flag. The `rcr` instruction copies this carry flag value into the most significant bit of EAX. Chapter 16 introduces two doubleshift instructions to facilitate shifting of 64-bit numbers.

Defining Constants

NASM provides several directives to define constants. In this section, we discuss three directives—EQU, %assign and %define.

The EQU Directive

The syntax of the EQU directive is

```
name    EQU    expression
```

which assigns the result of the expression to name. For example, we can use

```
NUM_OF_STUDENTS    EQU    90
```

to assign 90 to NUM_OF_STUDENTS. It is customary to use capital letters for these names in order to distinguish them from variable names. Then, we can write

```
          . . .
mov     ECX,NUM_OF_STUDENTS
          . . .
cmp     EAX,NUM_OF_STUDENTS
          . . .
```

to move 90 into the ECX register and to compare EAX with 90. Defining constants this way has two advantages:

1. Such definitions increase program readability. This can be seen by comparing the statement

   ```
   mov     ECX,NUM_OF_STUDENTS
   ```

   with

   ```
   mov     ECX,90
   ```

   The first statement clearly indicates that we are moving the class size into the ECX register.
2. Multiple occurrences of a constant can be changed from a single place. For example, if the class size changes from 90 to 100, we just need to change the value in the EQU statement. If we didn't use the EQU directive, we have to scan the source code and make appropriate changes—a risky and error-prone process!

The operand of an EQU statement can be an expression that evaluates at assembly time. We can, for example, write

```
NUM_OF_ROWS     EQU     50
NUM_OF_COLS     EQU     10
ARRAY_SIZE      EQU     NUM_OF_ROWS * NUM_OF_COLS
```

to define ARRAY_SIZE to be 500.

The symbols that have been assigned a value cannot be reassigned another value in a given source module. If such redefinitions are required, you should use %assign directive, which is discussed next.

The %assign Directive

This directive can be used to define numeric constants like the EQU directive. However, %assign allows redefinition. For example, we define

```
%assign   i   j+1
```

and later in the code we can redefine it as

```
%assign   i   j+2
```

Like the EQU directive, it is evaluated once when %assign is processed.

The %assign is case sensitive. That is, i and I are treated as different. We can use %iassign for case insensitive definition.

Both EQU and %assign directives can be used to define numeric constants. The next directive removes this restriction.

The %define Directive

This directive is similar to the #define in C. It can be used to define numeric as well as string constants. For example

```
%define   X1   [EBP+4]
```

replaces X1 by [EBP+4]. Like the last directive, it allows redefinition. For example, we can redefine X1 as

```
%define   X1   [EBP+20]
```

The %define directive is case sensitive. If you want the case insensitive version, you should use the %idefine directive.

Macros

Macros provide a means by which a block of text (code, data, etc.) can be represented by a name (called the *macro name*). When the assembler encounters that name later in the program, the block of text associated with the macro name is substituted. This process is referred to as *macro expansion*. In simple terms, macros provide a sophisticated text substitution mechanism.

In NASM, macros can be defined with %macro and %endmacro directives. The macro text begins with the %macro directive and ends with the %endmacro directive. The macro definition syntax is

```
%macro     macro_name   para_count
           <macro body>
%endmacro
```

The para_count specifies the number parameters used in the macro. The macro_name is the name of the macro that, when used later in the program, causes *macro expansion*. To invoke or call a macro, use the macro_name and supply the necessary parameter values.

Example 10.1 *A parameterless macro.*
Here is our first macro example that does not require any parameters. Since using left-shift to multiply by a power of two is more efficient than using multiplication, let us write a macro to do this.

```
%macro  multEAX_by_16
        sal     EAX,4
%endmacro
```

The macro code consists of a single `sal` instruction, which will be substituted whenever the macro is called. Now we can invoke this macro by using the macro name `multEAX_by_16`, as in the following example:

```
        . . .
mov     EAX,27
multEAX_by_16
        . . .
```

When the assembler encounters the macro name `multEAX_by_16`, it is replaced (i.e., text substituted) by the macro body. Thus, after the macro expansion, the assembler finds the code

```
        . . .
mov     EAX,27
sal     EAX,4
        . . .
```

□

Macros with Parameters Just as with procedures, using parameters with macros aids in writing more flexible and useful macros. The previous macro always multiplies EAX by 16. By using parameters, we can generalize this macro to operate on a byte, word, or doubleword located either in a general-purpose register or memory. The modified macro is

```
%macro    mult_by_16  1
          sal     %1,4
%endmacro
```

This macro takes one parameter, which can be any operand that is valid in the `sal` instruction. Within the macro body, we refer to the parameters by their number as in `%1`. To multiply a byte in the DL register

```
mult_by_16    DL
```

can be used. This causes the following macro expansion:

```
sal     DL,4
```

Similarly, a memory variable `count`, whether it is a byte, word, or doubleword, can be multiplied by 16 using

```
mult_by_16    count
```

Such a macro call will be expanded as

```
sal     count,4
```

Now, at least superficially, `mult_by_16` looks like any other assembly language instruction, except that it is defined by us. These are referred to as *macro-instructions*.

Example 10.2 *Memory-to-memory data transfer macro.*
We know that memory-to-memory data transfers are not allowed. We have to use an intermediate register to facilitate such a data transfer. We can write a macro to perform memory-to-memory data transfers using the basic instructions of the processor. Let us call this macro, which exchanges the values of two memory variables, `mxchg` to exchange doublewords of data in memory.

```
%macro    mxchg   2
          xchg    EAX,%1
          xchg    EAX,%2
          xchg    EAX,%1
%endmacro
```

For example, when this macro is invoked as

```
mxchg     value1,value2
```

it exchanges the memory words `value1` and `value2` while leaving EAX unaltered. □

To end this section, we give couple of examples from the `io.mac` file.

Example 10.3 `PutInt` *macro definition from* `io.mac` *file.*
This macro is used to display a 16-bit integer, which is given as the argument to the macro, by calling `proc_PutInt` procedure. The macro definition is shown below:

```
%macro  PutInt  1
        push    AX
        mov     AX,%1
        call    proc_PutInt
        pop     AX
%endmacro
```

The `PutInt` procedure expects the integer to be in AX. Thus, in the macro body, we moves the input integer to AX before calling the procedure. Note that by using the `push` and `pop`, we preserve the AX register. □

Example 10.4 `GetStr` *macro definition from* `io.mac` *file.*
This macro takes one or two parameters: a pointer to a buffer and an optional buffer length. The input string is read into the buffer. If the buffer length is given, it will read a string that is one less than the buffer length (one byte is reserved for the NULL character). If the buffer length is not specified, a default value of 81 is assumed. This macro calls `proc_GetStr` procedure to read the string. This procedure expects the buffer pointer in EDI and buffer length in ESI register. The macro definition is given below:

```
%macro  GetStr  1-2 81
        push    ESI
        push    EDI
        mov     EDI,%1
        mov     ESI,%2
        call    proc_GetStr
        pop     EDI
        pop     ESI
%endmacro
```

This macro is different from the previous one in that the number of parameters can be between 1 and 2. This condition is indicated by specifying the range of parameters (1-2 in our example). A further complication is that, if the second parameter is not specified, we have to use the default value (81 in our example). As shown in our example, we include this default value in the macro definition. Note that this default value is used only if the buffer length is not specified. □

Our coverage of macros is a small sample of what is available in NASM. You should refer to the latest version of the NASM manual for complete details on macros.

Our First Program

This program reads a key from the input and displays its ASCII code in binary. It then queries the user as to whether he/she wants to quit. Depending on the response, the program either requests another character input from the user, or terminates.

To display the binary value of the ASCII code of the input key, we test each bit starting with the most significant bit (i.e., leftmost bit). The `mask` is initialized to 80H (=10000000B), which tests only the most significant bit of the ASCII value. If this bit is 0, the instruction on line 28

```
test    AL,mask
```

sets the zero flag (assuming that the ASCII value is in the AL register). In this case, a 0 is displayed by directing the program flow using the `jz` instruction (line 29). Otherwise, a 1 is displayed. The `mask` is then divided by 2, which is equivalent to right shifting `mask` by one bit position. Thus, we are ready for testing the second most significant bit. The process is repeated for each bit of the ASCII value. The pseudocode of the program is given below:

```
main()
read_char:
    display prompt message
    read input character into char
    display output message text
    mask := 80H {AH is used to store mask}
    count := 8 {CX is used to store count}
    repeat
        if ((char AND mask) = 0)
        then
            write 0
        else
            write 1
        end if
```

```
            mask := mask/2 {can be done by shr}
            count := count - 1
        until (count = 0)
        display query message
        read response
        if (response = 'Y')
        then
            goto done
        else
            goto read_char
        end if
    done:
        return
    end main
```

The assembly language program, shown in Program 10.1, follows the pseudocode in a straightforward way. Note that the instruction set provides an instruction to perform integer division. However, to divide a number by 2, `shr` is much faster than the divide instruction. More details about the division instructions are given in Chapter 14.

Program 10.1 Conversion of ASCII to binary representation

```
 1:  ;Binary equivalent of characters            BINCHAR.ASM
 2:  ;
 3:  ;        Objective: To print the binary equivalent of
 4:  ;                   ASCII character code.
 5:  ;            Input: Requests a character from the user.
 6:  ;           Output: Prints the ASCII code of the
 7:  ;                   input character in binary.
 8:  %include "io.mac"
 9:
10:  .DATA
11:  char_prompt    db  "Please input a character: ",0
12:  out_msg1       db  "The ASCII code of '",0
13:  out_msg2       db  "' in binary is ",0
14:  query_msg      db  "Do you want to quit (Y/N): ",0
15:
16:  .CODE
17:       .STARTUP
18:  read_char:
19:       PutStr  char_prompt  ; request a char. input
20:       GetCh   AL           ; read input character
21:
22:       PutStr  out_msg1
23:       PutCh   AL
24:       PutStr  out_msg2
25:       mov     AH,80H       ; mask byte = 80H
26:       mov     CX,8         ; loop count to print 8 bits
27:  print_bit:
```

```
        test    AL,AH          ; test does not modify AL
        jz      print_0        ; if tested bit is 0, print it
        PutCh   '1'            ; otherwise, print 1
        jmp     skip1
print_0:
        PutCh   '0'            ; print 0
skip1:
        shr     AH,1           ; right shift mask bit to test
                               ;  next bit of the ASCII code
        loop    print_bit
        nwln
        PutStr  query_msg      ; query user whether to terminate
        GetCh   AL             ; read response
        cmp     AL,'Y'         ; if response is not 'Y'
        jne     read_char      ; read another character
done:                          ; otherwise, terminate program
        .EXIT
```

Illustrative Examples

This section presents two examples that perform ASCII to hex conversion. One example uses character manipulation for the conversion while the other uses the `xlat` instruction.

Example 10.5 *ASCII to hexadecimal conversion using character manipulation.*
The objective of this example is to show how numbers can be converted to characters by using character manipulation. In order to get the least significant hex digit, we have to mask off the upper half of the byte and then perform integer to hex digit conversion. The example shown below assumes that the input character is L, whose ASCII value is 4CH.

$$\text{L} \xrightarrow{\text{ASCII}} 01001100\text{B} \xrightarrow[\text{upper half}]{\text{mask off}} 00001100\text{B} \xrightarrow[\text{to hex}]{\text{convert}} \text{C}$$

Similarly, to get the most significant hex digit we have to isolate the upper half of the byte and move these four bits to the lower half, as shown below:

$$\text{L} \xrightarrow{\text{ASCII}} 01001100\text{B} \xrightarrow[\text{lower half}]{\text{mask off}} 01000000\text{B} \xrightarrow[\text{4 positions}]{\text{shift right}} 00000100\text{B} \xrightarrow[\text{to hex}]{\text{convert}} 4$$

Notice that shifting right by four bit positions is equivalent to performing integer division by 16. The pseudocode of the program shown in Program 10.2 is as follows:

```
main()
read_char:
    display prompt message
    read input character into char
    display output message text
    temp := char
```

```
        char := char AND F0H {mask off lower half}
        char := char/16 {shift right by 4 positions}
            {The last two steps can be done by shr}
        convert char to hex equivalent and display
        char := temp {restore char }
        char := char AND 0FH {mask off upper half}
        convert char to hex equivalent and display
        display query message
        read response
        if (response = 'Y')
        then
            goto done
        else
            goto read_char
        end if
    done:
        return
    end main
```

To convert a number between 0 and 15 to its equivalent in hex, we have to divide the process into two parts depending on whether the number is below 10 or not. The conversion using character manipulation can be summarized as follows:

```
if (number ≤ 9)
then
    write (number + '0')
then
    write (number + 'A' − 10)
end if
```

If the number is between 0 and 9, we add the ASCII value for character 0 to convert the number to its character equivalent. For instance, if the number is 5 (00000101B), it should be converted to character 5, whose ASCII value is 35H (00110101B). Therefore, we have to add 30H, which is the ASCII value of character 0. This is done in Program 10.2 by

```
add     AL,'0'
```

on line 31. If the number is between 10 and 15, we have to convert it to a hex digit between A and F. You can verify that the required translation is achieved by

```
number − 10 + ASCII value for character A
```

In Program 10.2, this is done by

```
add     AL,'A'-10
```

on line 34.

Program 10.2 Conversion to hexadecimal by character manipulation

```
;Hex equivalent of characters                HEX1CHAR.ASM
;
;        Objective: To print the hex equivalent of
;                   ASCII character code.
;            Input: Requests a character from the user.
;           Output: Prints the ASCII code of the
;                   input character in hex.
%include "io.mac"

.DATA
char_prompt    db  "Please input a character: ",0
out_msg1       db  "The ASCII code of '",0
out_msg2       db  "' in hex is ",0
query_msg      db  "Do you want to quit (Y/N): ",0

.CODE
     .STARTUP
read_char:
     PutStr  char_prompt  ; request a char. input
     GetCh   AL           ; read input character

     PutStr  out_msg1
     PutCh   AL
     PutStr  out_msg2
     mov     AH,AL        ; save input character in AH
     shr     AL,4         ; move upper 4 bits to lower half
     mov     CX,2         ; loop count - 2 hex digits to print
print_digit:
     cmp     AL,9         ; if greater than 9
     jg      A_to_F       ; convert to A through F digits
     add     AL,'0'       ; otherwise, convert to 0 through 9
     jmp     skip
A_to_F:
     add     AL,'A'-10    ; subtract 10 and add 'A'
                          ; to convert to A through F
skip:
     PutCh   AL           ; write the first hex digit
     mov     AL,AH        ; restore input character in AL
     and     AL,0FH       ; mask off the upper half byte
     loop    print_digit
     nwln
     PutStr  query_msg    ; query user whether to terminate
     GetCh   AL           ; read response

     cmp     AL,'Y'       ; if response is not 'Y'
     jne     read_char    ; read another character
done:                     ; otherwise, terminate program
     .EXIT
```

Example 10.6 *ASCII to hexadecimal conversion using the xlat instruction.*
The objective of this example is to show how the use of `xlat` simplifies the solution of the last example. In this example, we use the `xlat` instruction to convert a number between 0 and 15 to its equivalent hex digit. The program is shown in Program 10.3. To use `xlat` we have to construct a translation table, which is done by the following statement (line 17):

```
hex_table    db    '0123456789ABCDEF'
```

We can then use the number as an index into the table. For example, 10 points to `A`, which is the equivalent hex digit. In order to use the `xlat` instruction, EBX should point to the base of the `hex_table` and AL should have the number. The instructin on line 29 loads the `hex_table` address into EBX. The rest of the program is straightforward to follow.

Program 10.3 Conversion to hexadecimal by using the `xlat` instruction

```
 1:  ;Hex equivalent of characters              HEX2CHAR.ASM
 2:  ;
 3:  ;        Objective: To print the hex equivalent of
 4:  ;                   ASCII character code. Demonstrates
 5:  ;                   the use of xlat instruction.
 6:  ;            Input: Requests a character from the user.
 7:  ;           Output: Prints the ASCII code of the
 8:  ;                   input character in hex.
 9:  %include "io.mac"
10:
11:  .DATA
12:  char_prompt    db  "Please input a character: ",0
13:  out_msg1       db  "The ASCII code of '",0
14:  out_msg2       db  "' in hex is ",0
15:  query_msg      db  "Do you want to quit (Y/N): ",0
16:  ; translation table: 4-bit binary to hex
17:  hex_table      db  "0123456789ABCDEF"
18:
19:  .CODE
20:       .STARTUP
21:  read_char:
22:       PutStr  char_prompt  ; request a char. input
23:       GetCh   AL           ; read input character
24:
25:       PutStr  out_msg1
26:       PutCh   AL
27:       PutStr  out_msg2
28:       mov     AH,AL        ; save input character in AH
29:       mov     EBX,hex_table; EBX = translation table
30:       shr     AL,4         ; move upper 4 bits to lower half
31:       xlatb                ; replace AL with hex digit
32:       PutCh   AL           ; write the first hex digit
33:       mov     AL,AH        ; restore input character to AL
34:       and     AL,0FH       ; mask off upper 4 bits
35:       xlatb
```

```
36:         PutCh   AL          ; write the second hex digit
37:         nwln
38:         PutStr  query_msg   ; query user whether to terminate
39:         GetCh   AL          ; read response
40:
41:         cmp     AL,'Y'      ; if response is not 'Y'
42:         jne     read_char   ; read another character
43:   done:                     ; otherwise, terminate program
44:         .EXIT
```

When to Use the XLAT Instruction

The `xlat` instruction is convenient to perform character conversions. Proper use of `xlat` would produce an efficient assembly language program. In this section, we demonstrate by means of two examples when `xlat` is beneficial from the performance point of view.

In general, `xlat` is not really useful if, for example, there is a straightforward method or a "formula" for the required conversion. This is true for conversions that exhibit a regular structure. An example of this type of conversion is the case conversion between uppercase and lowercase letters in ASCII. As you know, the ASCII encoding makes this conversion rather simple. Experiment 1 takes a look at this type of example.

The use of the `xlat` instruction, however, produces efficient code if the conversion does not have a regular structure. Conversion from EBCDIC to ASCII is one example that can benefit from using the `xlat` instruction. Conversion to hex is another example, as shown in Examples 10.5 and 10.6. This example is used in Experiment 2 to show the performance benefit that can be obtained from using the `xlat` instruction for the conversion.

Experiment 1

In this experiment, we show how using the `xlat` instruction for case conversion of letters deteriorates the performance. We have transformed the code of Example 9.2 to a procedure that can be called from a C main program. This program keeps track of the execution time. All interaction with the display is suppressed for these experiments. This case-conversion procedure is called several times to convert a string of lowercase letters. The string length is fixed at 1000 characters.

We used two versions of the case conversion procedure. The first version does not use the `xlat` instruction for case conversion. Instead, it uses the statement

```
add     AL,'A'-'a'
```

as shown in Program 9.2.

The other version uses the `xlat` instruction for case conversion. In order to do so, we have to set up the following conversion table in the data section:

```
upper_table     db     'ABCDEFGHIJKLMNOPQRSTUVWXYZ'
```

Furthermore, after initializing EBX to `upper_table`, the following code

```
sub     AL,'a'
xlatb
```

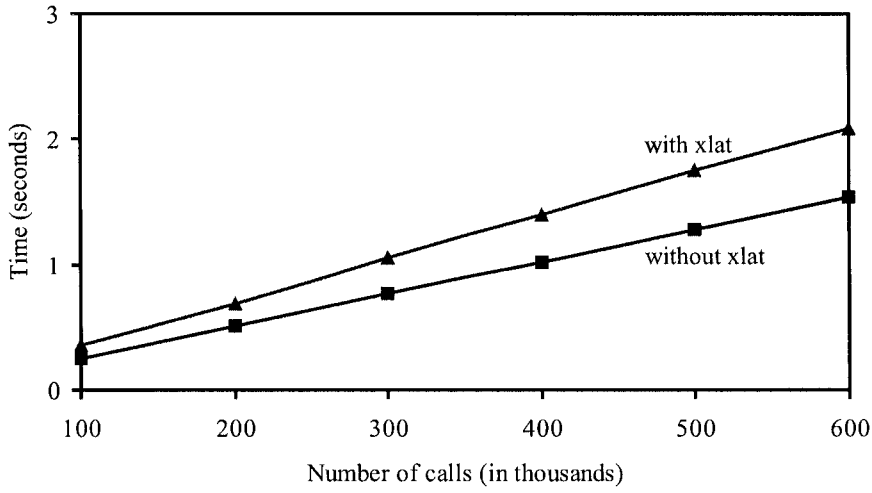

Figure 10.1 Performance of the case conversion program.

replaces the code

```
add     AL,'A'-'a'
```

You can clearly see the disadvantage of the `xlat` version of the code. First of all, it requires additional space to store the translation table `upper_table`. More important than this is the fact that the `xlat` version requires additional time. Note that the `add` and `sub` instructions take the same amount of time to execute. Therefore, the `xlat` version requires additional time to execute `xlat`, which generates a memory read to get the byte from `upper_table` located in the data segment.

The performance superiority of the first version (i.e., the version that does not use the `xlat` instruction) is clearly shown in Figure 10.1. These results were obtained on a 2.4-GHz Pentium 4 system. In this plot, the x-axis gives the number of times the case conversion procedure is called to convert a lowercase string of 1,000 characters. The data show that using the `xlat` instruction deteriorates the performance by about 35 percent! For the reasons discussed before, this is clearly a bad example to use the `xlat` instruction.

Experiment 2

In this experiment, we use the hex conversion examples presented in the last section to show the benefits of the `xlat` instruction. As shown in Example 10.5, without using the `xlat`, we have to test the input number to see if it falls in the range of 0–9 or 10–15. However, such testing and hence the associated overhead can be avoided by using a translation table along with `xlat`.

The two programs of Examples 10.5 and 10.6 have been converted to C callable procedures as in the last experiment. Each procedure receives a string and converts the characters in the input string to their hex equivalents. However, the hex code is not displayed. The input test string in this experiment consists of lowercase and uppercase letters, digits, and special symbols for a total of 100 characters.

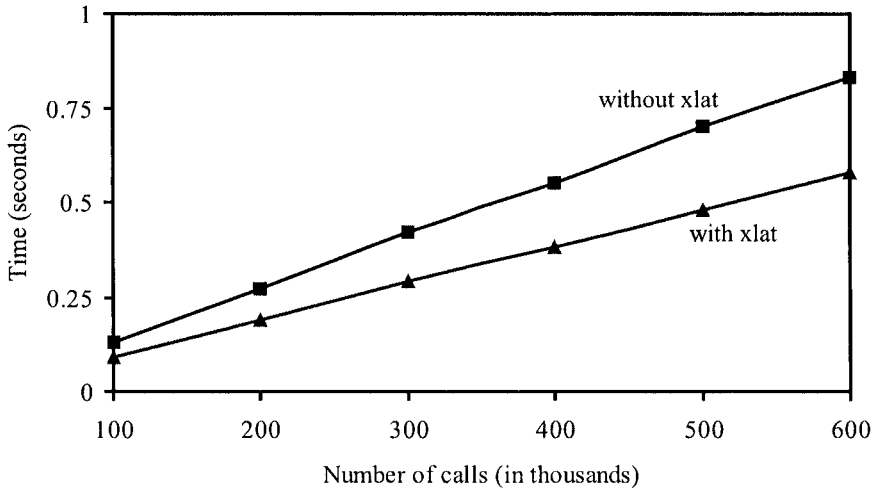

Figure 10.2 Performance of the hex conversion program.

The results, obtained on a 2.4-GHz Pentium 4 system, are shown in Figure 10.2. The data presented in this figure clearly demonstrate the benefit of using the `xlat` in this example. The procedure that does not use the `xlat` instruction is about 45% slower!

The moral of the story is that judicious use of assembly language instructions is necessary in order to reap the benefits of the assembly language.

Summary

We presented two instructions for data exchange and translation: `xchg` and `xlat`. The first instruction, which exchanges two data values, is useful in sort applications. The `xlat` instruction translates a byte value. We also discussed the shift and rotate family of instructions.

We presented the NASM directives to define constants—both numeric and string. We described three NASM directives: `EQU`, `%assign` and `%define`. The `EQU` directive can be used to define numeric constants. This directive does not allow redefinition. The `%assign` can also be used to define numeric constants. However, it allows redefinition. The `%define` directive can be used to define both string and numeric constants.

We introduced the macros supported by the NASM assembler. Macros permit the assembly language programmer to name a group of statements and refer to the group by the macro name. The NASM assembler supports macros with parameters to allow additional flexibility. We used several examples to illustrate how macros are defined in the assembly language programs.

We also demonstrated the performance advantage of the `xlat` instruction under certain conditions. The results show that judicious use of the `xlat` instruction provides significant performance advantages.

11

Writing Procedures

The last two chapters introduced the basics of the assembly language. Here we discuss how procedures are written in the assembly language. Procedure is an important programming construct that facilitates modular programming. In the IA-32 architecture, the stack plays an important role in procedure invocation and execution. We start this chapter by giving details on the stack, its uses, and how it is implemented. We also describe the assembly language instructions to manipulate the stack.

After this introduction to the stack, we look at the assembly language instructions for procedure invocation and return. Unlike high-level languages, there is not much support in the assembly language. For example, we cannot include the arguments in the procedure call. Thus parameter passing is more involved than in high-level languages. There are two parameter passing methods—one uses the registers and the other the stack. We discuss these two parameter passing methods in detail. The last section provides a summary of the chapter.

Introduction

A procedure is a logically self-contained unit of code designed to perform a particular task. These are sometimes referred to as *subprograms* and play an important role in modular program development. In high-level languages, there are two types of subprograms: *procedures* and *functions*. A function receives a list of arguments and performs a computation based on the arguments passed onto it and returns a single value. In this sense, these functions are very similar to the mathematical functions.

Procedures also receive a list of arguments just as the functions do. However, procedures, after performing their computation, may return zero or more results back to the calling procedure. In the C language, both these subprogram types are combined into a single function construct.

In the C function

```
int sum (int x, int y)
{
    return (x + y);
}
```

the parameters `x` and `y` are called formal parameters or simply parameters and the function body is defined based on these parameters. When this function is called (or invoked) by a statement like

```
total = sum(number1, number2);
```

the actual parameters or arguments—`number1` and `number2`—are used in the computation of the `sum` function.

There are two types of parameter passing mechanisms: *call-by-value* and *call-by-reference*. In the call-by-value mechanism, the called function (`sum` in our example) is provided only the current values of the arguments for its use. Thus, in this case, the values of these arguments are not changed in the called function; these values can only be used as in a mathematical function. In our example, the `sum` function is invoked by using the call-by-value mechanism, as we simply pass the values of `number1` and `number2` to the called `sum` function.

In the call-by-reference mechanism, the called function actually receives the addresses (i.e., pointers) of the parameters from the calling function. The function can change the contents of these parameters—and these changes will be seen by the calling function—by directly manipulating the argument storage space. For instance, the following `swap` function

```
void swap (int *a, int *b)
{
    int temp;
    temp = *a;
    *a = *b;
    *b = temp;
}
```

assumes that it receives the addresses of the two parameters from the calling function. Thus, we are using the call-by-reference mechanism for parameter passing. Such a function can be invoked by

```
swap (&data1, &data2);
```

Often both types of parameter passing mechanisms are used in the same function. As an example, consider finding the roots of the quadratic equation

$$ax^2 + bx + c = 0\,.$$

The two roots are defined as

$$\text{root1} = \frac{-b + \sqrt{b^2 - 4ac}}{2a}\,,$$

$$\text{root2} = \frac{-b - \sqrt{b^2 - 4ac}}{2a}\,.$$

The roots are real if $b^2 \geq 4ac$, and imaginary otherwise.

Suppose that we want to write a function that receives a, b, and c and returns the values of the two roots (if real) and indicates whether the roots are real or imaginary (see Figure 11.1). The `roots` function receives parameters `a`, `b`, and `c` using the call-by-value mechanism, and `root1` and `root2` parameters are passed using the call-by-reference mechanism. A typical invocation of `roots` is

```
root_type = roots (a, b, c, &root1, &root2);
```

```
int roots (double a, double b, double c,
           double *root1, double *root2)
{
    int root_type = 1;
    if (4 * a * c <= b * b){  /* roots are real */
       *root1 = (-b + sqrt(b*b - 4*a*c))/(2*a);
       *root2 = (-b - sqrt(b*b - 4*a*c))/(2*a);
    }
    else    /* roots are imaginary */
       root_type = 0;
    return (root_type);
 }
```

Figure 11.1 C function for the quadratic equation

In summary, procedures receive a list of arguments, which may be passed either by the call-by-value or by the call-by-reference mechanism. If more than one result is to be returned by a called procedure, the call-by-reference mechanism should be used.

In the assembly language we do not get as much help as we do in high-level languages. The instruction set provides only the basic support to invoke a procedure. However, there is no support to pass arguments in the procedure call. If we want to pass arguments to the called procedure, we have to use some shared space between the callee and caller. Typically, we use either registers or the stack for this purpose. This leads to the two basic parameter passing mechanisms: register-based or stack-based. Later we give more details on these mechanisms along with some examples.

Our goal in this chapter is to introduce assembly language procedures. We continue our discussion of procedures in the next chapter, which discusses passing a variable number of arguments, local variables, and multimodule programs.

What Is a Stack?

Conceptually, a stack is a last-in-first-out (LIFO) data structure. The operation of a stack is analogous to the stack of trays you find in cafeterias. The first tray removed from the stack of trays would be the last tray that had been placed on the stack. There are two operations associated with a stack: insertion and deletion. If we view the stack as a linear array of elements, stack insertion and deletion operations are restricted to one end of the array. Thus, the only element that is directly accessible is the element at the top-of-stack (TOS). In stack terminology, insert and delete operations are referred to as *push* and *pop* operations, respectively.

There is another related data structure, the *queue*. A queue can be considered as a linear array with insertions done at one end of the array and deletions at the other end. Thus, a queue is a first-in-first-out (FIFO) data structure.

As an example of a stack, let us assume that we are inserting numbers 1000 through 1003 into a stack in ascending order. The state of the stack can be visualized as shown in Figure 11.2. The arrow points to the top-of-stack. When the numbers are deleted from the stack, the numbers will come out in the reverse order of insertion. That is, 1003 is removed first, then 1002, and so on. After the deletion of the last number, the stack is said to be in the empty state (see Figure 11.3).

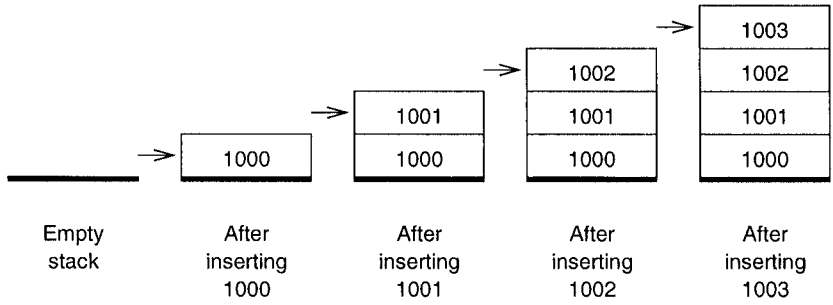

Figure 11.2 An example showing stack growth: Numbers 1000 through 1003 are inserted in ascending order. The arrow points to the top-of-stack.

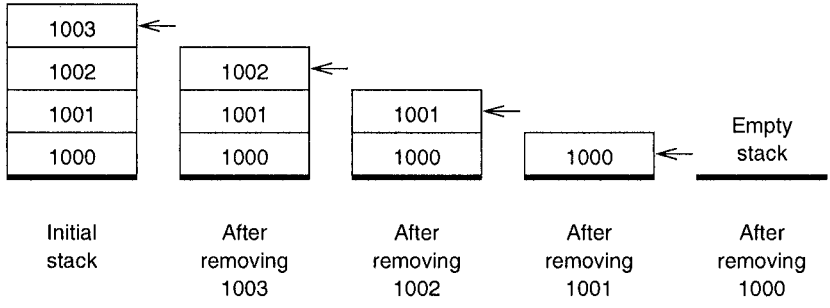

Figure 11.3 Deletion of data items from the stack: The arrow points to the top-of-stack.

In contrast, a queue maintains the order. Suppose that the numbers 1000 through 1003 are inserted into a queue as in the stack example. When removing the numbers from the queue, the first number to enter the queue would be the one to come out first. Thus, the numbers deleted from the queue would maintain their insertion order.

Implementation of the Stack

The memory space reserved in the stack segment is used to implement the stack. The registers SS and ESP are used to implement the stack. The top-of-stack, which points to the last item inserted into the stack, is indicated by SS:ESP, with the SS register pointing to the beginning of the stack segment, and the ESP register giving the offset value of the last item inserted.

The key stack implementation characteristics are as follows:

- Only words (i.e., 16-bit data) or doublewords (i.e., 32-bit data) are saved on the stack, never a single byte.
- The stack grows toward lower memory addresses. Since we graphically represent memory with addresses increasing from the bottom of a page to the top, we say that the stack grows *downward*.

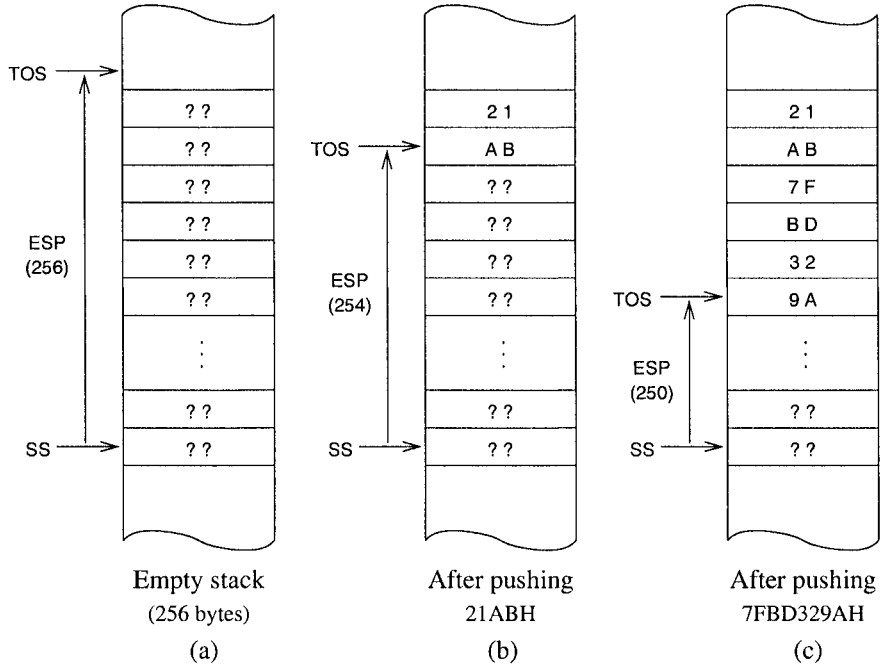

Figure 11.4 Stack implementation in the IA-32 architecture: SS:ESP points to the top-of-stack.

- Top-of-stack (TOS) always points to the last data item placed on the stack. The TOS always points to the lower byte of the last word pushed onto the stack. For example, when we push 21ABH onto the stack, the TOS points to ABH byte as shown in Figure 11.4.

Figure 11.4*a* shows an empty stack with 256 bytes of memory for stack operations. When the stack is initialized, TOS points to a byte just outside the reserved stack area. It is an error to read from an empty stack as this causes a *stack underflow*.

When a word is pushed onto the stack, ESP is first decremented by two, and then the word is stored at SS:ESP. Since the IA-32 processors use the little-endian byte order, the higher-order byte is stored in the higher memory address. For instance, when we push 21ABH, the stack expands by two bytes, and ESP is decremented by two to point to the last data item, as shown in Figure 11.4*b*. The stack shown in Figure 11.4*c* results when we expand the stack further by four more bytes by pushing the doubleword 7FBD329AH onto the stack.

The stack full condition is indicated by the zero offset value (i.e., ESP = 0). If we try to insert a data item into a full stack, *stack overflow* occurs. Both stack underflow and overflow are programming errors and should be handled with care.

Retrieving a 32-bit data item from the stack causes the offset value to increase by four to point to the next data item on the stack. For example, if we retrieve a doubleword from the stack shown in Figure 11.5*a*, we get 7FBD329AH from the stack and ESP is updated, as shown in Figure 11.5*b*. Notice that the four memory locations retain their values. However, since TOS is updated, these four locations will be used to store the next data value pushed onto the stack, as shown in Figure 11.5*c*.

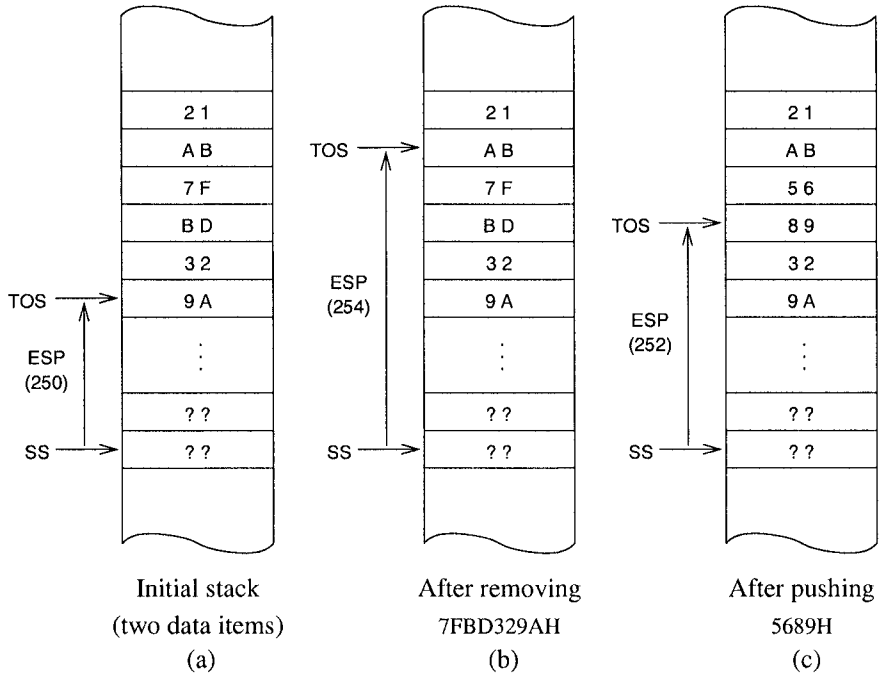

Figure 11.5 An example showing stack insert and delete operations.

Stack Operations

Basic Instructions

The stack data structure allows two basic operations: insertion of a data item into the stack (called the *push* operation) and deletion of a data item from the stack (called the *pop* operation). These two operations are allowed on word or doubleword data items. The syntax is

```
push    source
pop     destination
```

The operand of these two instructions can be a 16- or 32-bit general-purpose register, segment register, or a word or doubleword in memory. In addition, `source` for the push instruction can be an immediate operand of size 8, 16, or 32 bits. Table 11.1 summarizes the two stack operations.

On an empty stack shown in Figure 11.4*a* the statements

```
push    21ABH
push    7FBD329AH
```

would result in the stack shown in Figure 11.5*a*. Executing the statement

```
pop     EBX
```

on this stack would result in the stack shown in Figure 11.5*b* with the register EBX receiving 7FBD329AH.

Table 11.1 Stack operations on 16- and 32-bit data

push source16	ESP = ESP − 2 SS:ESP = source16	ESP is first decremented by 2 to modify TOS. Then the 16-bit data from source16 is copied onto the stack at the new TOS. The stack expands by 2 bytes.
push source32	ESP = ESP − 4 SS:ESP = source32	ESP is first decremented by 4 to modify TOS. Then the 32-bit data from source32 is copied onto the stack at the new TOS. The stack expands by 4 bytes.
pop dest16	dest16 = SS:ESP ESP = ESP + 2	The data item located at TOS is copied to dest16. Then ESP is incremented by 2 to update TOS. The stack shrinks by 2 bytes.
pop dest32	dest32 = SS:ESP ESP = ESP + 4	The data item located at TOS is copied to dest32. Then ESP is incremented by 4 to update TOS. The stack shrinks by 4 bytes.

Additional Instructions

The instruction set supports two special instructions for stack manipulation. These instructions can be used to save or restore the flags and general-purpose registers.

Stack Operations on Flags The push and pop operations cannot be used to save or restore the flags register. For this, two special versions of these instructions are provided:

```
pushfd    (push 32-bit flags)
popfd     (pop 32-bit flags)
```

These instructions do not need any operands. For operating on the 16-bit flags register (FLAGS), we can use pushfw and popfw instructions. If we use pushf the default operand size selects either pushfd or pushfw. In our programs, since our default is 32-bit operands, pushf is used as an alias for pushfd. However, we use pushfd to make the operand size explicit. Similarly, popf can be used as an alias for either popfd or popfw.

Stack Operations on All General-Purpose Registers The instruction set also has special pusha and popa instructions to save and restore the eight general-purpose registers. The pushad saves the 32-bit general-purpose registers EAX, ECX, EDX, EBX, ESP, EBP, ESI, and EDI. These registers are pushed in the order specified. The last register pushed is the EDI register. The popad restores these registers except that it will not copy the ESP value (i.e., the ESP value is not loaded into the ESP register as part of the popad instruction). The corresponding instructions for the 16-bit registers are pushaw and popaw. These instructions are useful in procedure calls, as we will show later. Like the pushf and popf instructions, we can use pusha and popa as aliases.

Uses of the Stack

The stack is used for three main purposes: as a scratchpad to temporarily store data, for transfer of program control, and for passing parameters during a procedure call.

Temporary Storage of Data

The stack can be used as a scratchpad to store data on a temporary basis. For example, consider exchanging the contents of two 32-bit variables that are in the memory: `value1` and `value2`. We cannot use

```
xchg    value1,value2        ; illegal
```

because both operands of `xchg` are in the memory. The code

```
mov     EAX,value1
mov     EBX,value2
mov     value1,EBX
mov     value2,EAX
```

works, but it uses two 32-bit registers. This code requires four memory operations. However, due to the limited number of general-purpose registers, finding spare registers that can be used for temporary storage is nearly impossible in almost all programs.

What if we need to preserve the contents of the EAX and EBX registers? In this case, we need to save these registers before using them and restore them later as shown below:

```
        . . .
;save EAX and EBX registers on the stack
     push   EAX
     push   EBX
     ;EAX and EBX registers can now be used
     mov    EAX,value1
     mov    EBX,value2
     mov    value1,EBX
     mov    value2,EAX
;restore EAX and EBX registers from the stack
     pop    EBX
     pop    EAX
        . . .
```

This code requires eight memory accesses. Because the stack is a LIFO data structure, the sequence of `pop` instructions is a mirror image of the `push` instruction sequence.

An elegant way of exchanging the two values is

```
push    value1
push    value2
pop     value1
pop     value2
```

Notice that the above code does not use any general-purpose registers and requires eight memory operations as in the other example. Another point to note is that `push` and `pop` instructions allow movement of data from memory to memory (i.e., between data and stack segments). This

is a special case because mov instructions do not allow memory-to-memory data transfer. Stack operations are an exception. String instructions, discussed in Chapter 17, also allow memory-to-memory data transfer.

Stack is frequently used as a scratchpad to save and restore registers. The necessity often arises when we need to free up a set of registers so they can be used by the current code. This is often the case with procedures as we will show later.

It should be clear from these examples that the stack grows and shrinks during the course of a program execution. It is important to allocate enough storage space for the stack, as stack overflow and underflow could cause unpredictable results, often causing system errors.

Transfer of Control

The previous discussion concentrated on how we, as programmers, can use the stack to store data temporarily. The stack is also used by some instructions to store data temporarily. In particular, when a procedure is called, the return address of the instruction is stored on the stack so that the control can be transferred back to the calling program. A detailed discussion of this topic is in the next section.

Parameter Passing

Another important use of the stack is to act as a medium to pass parameters to the called procedure. The stack is extensively used by high-level languages to pass parameters. A discussion on the use of the stack for parameter passing is deferred to a later section.

Procedure Instructions

The instruction set provides call and ret (return) instructions to write procedures in the assembly language. The call instruction can be used to invoke a procedure, and has the format

```
call    proc-name
```

where proc-name is the name of the procedure to be called. The assembler replaces proc-name by the offset value of the first instruction of the called procedure.

How Is Program Control Transferred?

The offset value provided in the call instruction is not the absolute value (i.e., offset is not relative to the start of the code segment pointed to by the CS register), but a relative displacement in bytes from the instruction following the call instruction. Let us look at the example in Figure 11.6.

After the call instruction of main has been fetched, the EIP register points to the next instruction to be executed (i.e., EIP = 00000007H). This is the instruction that should be executed after completing the execution of sum procedure. The processor makes a note of this by pushing the contents of the EIP register onto the stack.

Now, to transfer control to the first instruction of the sum procedure, the EIP register would have to be loaded with the offset value of the

```
push    EBP
```

instruction in sum. To do this, the processor adds the 32-bit relative displacement found in the call instruction to the contents of the EIP register. Proceeding with our example, the machine

```
 offset      machine code
(in hex)      (in hex)
                              main:
                                      . . .
00000002 E816000000            call    sum
00000007 89C3                  mov     EBX,EAX
                                      . . .
                              ; end of main procedure
;*******************************************************
                              sum:
0000001D    55                     push    EBP
                                      . . .
                              ; end of sum procedure
;*******************************************************
                              avg:
                                      . . .
00000028    E8F0FFFFFF             call    sum
0000002D    89D8                   mov     EAX,EBX
                                      . . .
                              ; end of avg procedure
;*******************************************************
```

Figure 11.6 An example to illustrate the transfer of program control.

language encoding of the `call` instruction, which requires five bytes, is E816000000H. The first byte E8H is the opcode for the `call` and the next four bytes give the (signed) relative displacement in bytes. In this example, it is the difference between 0000001DH (offset of the `push EBP` instruction in `sum`) and 00000007H (offset of the instruction `mov EBX,EAX` in `main`). Therefore, the displacement should be 0000001DH − 00000007H = 00000016H. This is the displacement value encoded in the `call` instruction. Note that this displacement value in this instruction is shown in the little-endian order, which is equal to 00000016H. Adding this difference to the contents of the EIP register leaves the EIP register pointing to the first instruction of `sum`.

Note that the procedure call in `main` is a forward call, and therefore the relative displacement is a positive number. As an example of a backward procedure call, let us look at the `sum` procedure call in the `avg` procedure. In this case, the program control has to be transferred back. That is, the displacement is a negative value. Following the explanation given in the last paragraph, we can calculate the displacement as 0000001DH − 0000002DH = FFFFFFF0H. Since negative numbers are expressed in 2's complement notation, FFFFFFF0H corresponds to −10H (i.e., −16D), which is the displacement value in bytes.

The following is a summary of the actions taken during a procedure call:

```
ESP = ESP − 2                      ; push return address onto the stack
SS:ESP = EIP
EIP = EIP + relative displacement  ; update EIP to point to the procedure
```

The relative displacement is a signed 32-bit number to accommodate both forward and backward procedure calls.

The ret Instruction

The `ret` (return) instruction is used to transfer control from the called procedure to the calling procedure. Return transfers control to the instruction following the `call` (the `mov EBX,EAX` instruction in our example). How will the processor know where this instruction is located? Remember that the processor made a note of this when the `call` instruction was executed. When the `ret` instruction is executed, the return address from the stack is recovered. The actions taken during the execution of the `ret` instruction are

```
EIP = SS:ESP     ; pop return address at TOS into IP
ESP = ESP + 4    ; update TOS by adding 4 to ESP
```

An optional integer may be included in the `ret` instruction, as in

```
ret 8
```

The details on this optional number are covered later.

Our First Program

In our first procedure example, two parameter values are passed onto the called procedure via the general-purpose registers. The procedure `sum` receives two integers in the CX and DX registers and returns the sum of these two integers via AX. No check is done to detect the overflow condition. The main program, shown in Program 11.1, requests two integers from the user and displays the sum on the screen.

Program 11.1 Parameter passing by call-by-value using registers

```
 1:  ;Parameter passing via registers                PROCEX1.ASM
 2:  ;
 3:  ;        Objective: To show parameter passing via registers.
 4:  ;            Input: Requests two integers from the user.
 5:  ;           Output: Outputs the sum of the input integers.
 6:  %include "io.mac"
 7:  .DATA
 8:  prompt_msg1  DB   "Please input the first number: ",0
 9:  prompt_msg2  DB   "Please input the second number: ",0
10:  sum_msg      DB   "The sum is ",0
11:
12:  .CODE
13:        .STARTUP
14:        PutStr  prompt_msg1     ; request first number
15:        GetInt  CX              ; CX = first number
16:
17:        PutStr  prompt_msg2     ; request second number
18:        GetInt  DX              ; DX = second number
19:
20:        call    sum             ; returns sum in AX
21:        PutStr  sum_msg         ; display sum
22:        PutInt  AX
23:        nwln
```

```
24:  done:
25:        .EXIT
26:
27:  ;-----------------------------------------------------------
28:  ;Procedure sum receives two integers in CX and DX.
29:  ;The sum of the two integers is returned in AX.
30:  ;-----------------------------------------------------------
31:  sum:
32:        mov     AX,CX          ; sum = first number
33:        add     AX,DX          ; sum = sum + second number
34:        ret
```

Parameter Passing

Parameter passing in assembly language is different and more complicated than that used in high-level languages. In the assembly language, the calling procedure first places all the parameters needed by the called procedure in a mutually accessible storage area (usually registers or memory). Only then can the procedure be invoked. There are two common methods depending on the type of storage area used to pass parameters: *register method* or *stack method*. As their names imply, the register method uses general-purpose registers to pass parameters, and the stack is used in the other method.

Register Method

In the register method, the calling procedure places the necessary parameters in the general-purpose registers before invoking the procedure, as we did in the last example. Next, let us look at the advantages and disadvantages of passing parameters using the register method.

Pros and Cons of the Register Method The register method has its advantages and disadvantages. These are summarized here.

Advantages

1. The register method is convenient and easier for passing a small number of arguments.
2. This method is also faster because all the arguments are available in registers.

Disadvantages

1. The main disadvantage is that only a few arguments can be passed by using registers, as there are a limited number of general-purpose registers available in the CPU.
2. Another problem is that the general-purpose registers are often used by the calling procedure for some other purpose. Thus, it is necessary to temporarily save the contents of these registers on the stack to free them for use in parameter passing before calling a procedure, and restore them after returning from the called procedure. In this case, it is difficult to realize the second advantage listed above, as the stack operations involve memory access.

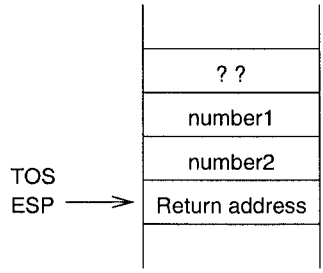

Figure 11.7 Stack state after the `sum` procedure call: Return address is the EIP value pushed onto the stack as part of executing the call instruction.

Stack Method

In this method of parameter passing, all arguments required by a procedure are pushed onto the stack before the procedure is called. As an example, let us consider passing the two parameters required by the `sum` procedure shown in Program 11.1. This can be done by

```
push    number1
push    number2
call    sum
```

After executing the call instruction, which automatically pushes the EIP contents onto the stack, the stack state is shown in Figure 11.7.

Reading the two arguments—`number1` and `number2`—is tricky. Since the parameter values are buried inside the stack, first we have to pop the EIP value to read the two arguments. This, for example, can be done by

```
pop     EAX
pop     EBX
pop     ECX
```

in the `sum` procedure. Since we have removed the return address (EIP) from the stack, we will have to restore it by

```
push    EAX
```

so that TOS is pointing to the return address.

The main problem with this code is that we need to set aside general-purpose registers to copy parameter values. This means that the calling procedure cannot use these registers for any other purpose. Worse still, what if you want to pass 10 parameters? One way to free up registers is to copy the parameters from the stack to local data variables, but this is impractical and inefficient.

The best way to get parameter values is to leave them on the stack and read them from the stack as needed. Since the stack is a sequence of memory locations, ESP + 4 points to `number2`, and ESP + 6 to `number1`. Note that both `number1` and `number2` are 16-bit values. For instance,

```
mov     EBX, [ESP+4]
```

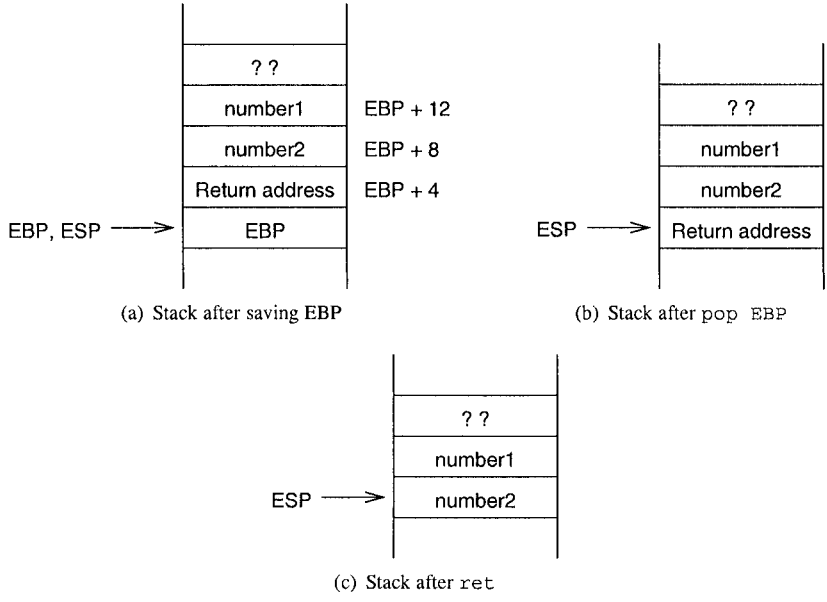

Figure 11.8 Changes in stack state during a procedure execution.

can be used to access `number2`, but this causes a problem. The stack pointer register is updated by the push and pop instructions. As a result, the relative offset changes with the stack operations performed in the called procedure. This is not a desirable situation.

There is a better alternative: we can use the EBP register instead of ESP to specify an offset into the stack segment. For example, we can copy the value of `number2` into the EAX register by

```
mov     EBP,ESP
mov     EAX,[EBP+4]
```

This is the usual way of pointing to the parameters on the stack. Since every procedure uses the EBP register to access parameters, the EBP register should be preserved. Therefore, we should save the contents of the EBP register before executing the

```
mov     EBP,ESP
```

statement. We, of course, use the stack for this. Note that

```
push    EBP
mov     EBP,ESP
```

causes the parameter displacement to increase by four bytes, as shown in Figure 11.8*a*.

The information stored in the stack—parameters, return address, and the old EBP value—is collectively called the *stack frame*. As we show on page 256, the stack frame also consists of local

variables if the procedure uses them. The EBP value is referred to as the *frame pointer* (FP). Once the EBP value is known, we can access all items in the stack frame.

Before returning from the procedure, we should use

```
pop    EBP
```

to restore the original value of EBP. The resulting stack state is shown in Figure 11.8*b*.

The `ret` statement causes the return address to be placed in the EIP register, and the stack state after `ret` is shown in Figure 11.8*c*.

Now the problem is that the four bytes of the stack occupied by the two arguments are no longer useful. One way to free these four bytes is to increment ESP by four after the call statement, as shown below:

```
push    number1
push    number2
call    sum
add     ESP,4
```

For example, C compilers use this method to clear parameters from the stack. The above assembly language code segment corresponds to the

```
sum(number2, number1);
```

function call in C.

Rather than adjusting the stack by the calling procedure, the called procedure can also clear the stack. Note that we cannot write

```
sum:
        . . .
    add     ESP,4
    ret
```

because when `ret` is executed, ESP should point to the return address on the stack. The solution lies in the optional operand that can be specified in the `ret` statement. The format is

```
ret     optional-value
```

which results in the following sequence of actions:

EIP = SS:ESP
ESP = ESP + 4 + `optional-value`

The `optional-value` should be a number (i.e., 16-bit immediate value). Since the purpose of the optional value is to discard the parameters pushed onto the stack, this operand takes a positive value.

Who Should Clean Up the Stack?

We have discussed the following ways of discarding the unwanted parameters on the stack:

1. clean-up is done by the calling procedure, or
2. clean-up is done by the called procedure.

If procedures require a fixed number of parameters, the second method is preferred. In this case, we write the clean-up code only once in the called procedure independent of the number of times this procedure is called. We follow this convention in our assembly language programs. However, if a procedure receives a variable number of parameters, we have to use the first method. We discuss this topic in detail in a later section.

Preserving Calling Procedure State

It is important to preserve the contents of the registers across a procedure call. The necessity for this is illustrated by the following code:

```
            . . .
        mov     ECX,count
repeat:
       call     compute
            . . .
            . . .
       loop     repeat
            . . .
```

The code invokes the `compute` procedure `count` times. The ECX register maintains the number of remaining iterations. Recall that, as part of the `loop` instruction execution, the ECX register is decremented by 1 and, if not 0, starts another iteration.

Suppose, now, that the `compute` procedure uses the ECX register during its computation. Then, when `compute` returns control to the calling program, ECX would have changed, and the program logic would be incorrect.

Since there are a limited number of registers and registers should be used for writing efficient code, registers should be preserved. The stack is used to save registers temporarily.

Which Registers Should Be Saved?

The answer to this question is simple: Save those registers that are used by the calling procedure but changed by the called procedure. This leads to the following question: Which procedure, the calling or the called, should save the registers?

Usually, one or two registers are used to return a value by the called procedure. Therefore, such register(s) do not have to be saved. For example, the EAX register is often used to return integer values.

In order to avoid the selection of the registers to be saved, we could save, blindly, all registers each time a procedure is invoked. For instance, we could use the `pushad` instruction (see page 237). But such an action results in unnecessary overhead.

If the calling procedure were to save the necessary registers, it needs to know the registers used by the called procedure. This causes two serious difficulties:

1. Program maintenance would be difficult because, if the called procedure were modified later on and a different set of registers used, every procedure that calls this procedure would have to be modified.
2. Programs tend to be longer because if a procedure is called several times, we have to include the instructions to save and restore the registers each time the procedure is called.

For these reasons, we assume that the called procedure saves the registers that it uses and restores them before returning to the calling procedure. This also conforms to the modular program design principles.

When to Use pusha

The `pusha` instruction is useful in certain instances, but not all. We identify some instances where `pusha` is not useful. First, what if some of the registers saved by `pusha` are used for returning

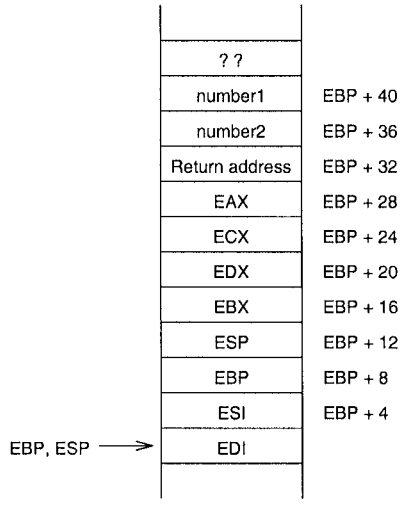

Figure 11.9 Stack state after `pusha`.

results? For instance, EAX register is often used to return integer results. In this case `pusha` is not really useful, as `popa` destroys the result to be returned to the calling procedure. Second, since `pusha` introduces more overhead, it may be worthwhile to use the `push` instruction if we want to save only one or two registers. Of course, the other side of the coin is that `pusha` improves readability of code and reduces memory required for the instructions.

When `pusha` is used to save registers, it modifies the offset of the parameters. Note that

```
pusha
mov     EBP,ESP
```

causes the stack state, shown in Figure 11.9, to be different from that shown in Figure 11.8*a* on page 244. You can see that the offset of `number1` and `number2` increases.

ENTER and LEAVE Instructions

The instruction set has two instructions to facilitate stack frame allocation and release on procedure entry and exit. The `enter` instruction can be used to allocate a stack frame on entering a procedure. The format is

```
enter    bytes,level
```

The first operand `bytes` specifies the number of bytes of local variable storage we want on the new stack frame. We discuss local variables in the next chapter. Until then, we set the first operand to zero. The second operand `level` gives the nesting level of the procedure. If we specify a nonzero level, it copies `level` stack frame pointers into the new frame from the preceding stack frame. In all our examples, we set the second operand to zero. Thus the statement

```
enter    XX,0
```

is equivalent to

```
push    EBP
mov     EBP,ESP
sub     ESP,XX
```

The `leave` instruction releases the stack frame allocated by the `enter` instruction. It does not take any operands. The `leave` instruction effectively performs the following:

```
mov     ESP,EBP
pop     EBP
```

We use the `leave` instruction before the `ret` instruction as shown in the following template for procedures:

```
proc-name:
    enter   XX,0
        . . .
    procedure body
        . . .
    leave
    ret     YY
```

As we show in the next chapter (page 259), the `XX` value is nonzero only if our procedure needs some local variable space on the stack frame. The value `YY` is used to clear the arguments passed on to the procedure.

Illustrative Examples

In this section, we use several examples to illustrate register-based and stack-based parameter passing.

Example 11.1 *Parameter passing by call-by-reference using registers.*
This example shows how parameters can be passed by call-by-reference using the register method. The program requests a character string from the user and displays the number of characters in the string (i.e., string length). The string length is computed by the `str_len` function. This function scans the input string for the NULL character while keeping track of the number of characters in the string. The pseudocode is shown below:

```
str_len (string)
    index := 0
    length := 0
    while (string[index] ≠ NULL)
        index := index + 1
        length := length + 1      { AX is used for string length}
    end while
    return (length)
end str_len
```

The `str_len` function receives a pointer to the string in EBX and returns the string length in the EAX register. The program listing is given in Program 11.2. The `main` procedure executes

```
mov     EBX,string
```

to place the address of `string` in EBX (line 22) before invoking the procedure on line 23. Note that even though the procedure modifies the EBX register during its execution, it restores the original value of EBX by saving its value initially on the stack (line 35) and restoring it (line 44) before returning to the `main` procedure.

Program 11.2 Parameter passing by call-by-reference using registers

```
 1:  ;Parameter passing via registers                    PROCEX2.ASM
 2:  ;
 3:  ;        Objective: To show parameter passing via registers
 4:  ;            Input: Requests a character string from the user.
 5:  ;           Output: Outputs the length of the input string.
 6:
 7:  %include "io.mac"
 8:  BUF_LEN     EQU  41          ; string buffer length
 9:
10:  .DATA
11:  prompt_msg  db  "Please input a string: ",0
12:  length_msg  db  "The string length is ",0
13:
14:  .UDATA
15:  string      resb  BUF_LEN    ;input string < BUF_LEN chars.
16:
17:  .CODE
18:        .STARTUP
19:        PutStr  prompt_msg     ; request string input
20:        GetStr  string,BUF_LEN ; read string from keyboard
21:
22:        mov     EBX,string     ; EBX = string address
23:        call    str_len        ; returns string length in AX
24:        PutStr  length_msg     ; display string length
25:        PutInt  AX
26:        nwln
27:  done:
28:        .EXIT
29:
30:  ;-----------------------------------------------------------
31:  ;Procedure str_len receives a pointer to a string in BX.
32:  ;String length is returned in AX.
33:  ;-----------------------------------------------------------
34:  str_len:
35:        push    EBX
36:        sub     AX,AX          ; string length = 0
37:  repeat:
38:        cmp     byte [EBX],0   ; compare with NULL char.
39:        je      str_len_done   ; if NULL we are done
40:        inc     AX             ; else, increment string length
41:        inc     EBX            ; point BX to the next char.
```

```
        jmp     repeat          ;  and repeat the process
str_len_done:
        pop     EBX
        ret
```

Example 11.2 *Parameter passing by call-by-value using the stack.*
This is the stack counterpart of Program 11.1, which passes two integers to the procedure `sum`. The procedure returns the sum of these two integers in the AX register. The program listing is given in Program 11.3.

The program requests two integers from the user. It reads the two numbers into the CX and DX registers using `GetInt` (lines 16 and 19). Since the stack is used to pass the two numbers, we have to place them on the stack before calling the `sum` procedure (see lines 21 and 22). The state of the stack after the control is transferred to `sum` is shown in Figure 11.7 on page 243.

As discussed before, the EBP register is used to access the two parameters from the stack. Therefore, we have to save EBP itself on the stack. We do this by using the `enter` instruction (line 35), which changes the stack state to that in Figure 11.8*a* on page 244.

The original value of EBP is restored at the end of the procedure using the `leave` instruction (line 38). Accessing the two numbers follows the explanation given in Section 11. Note that the first number is at EBP + 10, and the second one at EBP + 8. As in our first example on page 241, no overflow check is done by `sum`. Control is returned to `main` by

```
ret     4
```

because `sum` has received two parameters requiring a total space of four bytes on the stack. This `ret` statement clears `number1` and `number2` from the stack.

Program 11.3 Parameter passing by call-by-value using the stack

```
 1:  ;Parameter passing via the stack                    PROCEX3.ASM
 2:  ;
 3:  ;        Objective: To show parameter passing via the stack.
 4:  ;            Input: Requests two integers from the user.
 5:  ;           Output: Outputs the sum of the input integers.
 6:  %include "io.mac"
 7:
 8:  .DATA
 9:  prompt_msg1  db   "Please input the first number: ",0
10:  prompt_msg2  db   "Please input the second number: ",0
11:  sum_msg      db   "The sum is ",0
12:
13:  .CODE
14:        .STARTUP
15:        PutStr  prompt_msg1     ; request first number
16:        GetInt  CX              ; CX = first number
17:
18:        PutStr  prompt_msg2     ; request second number
19:        GetInt  DX              ; DX = second number
```

```
20:
21:         push    CX              ; place first number on stack
22:         push    DX              ; place second number on stack
23:         call    sum             ; returns sum in AX
24:         PutStr  sum_msg         ; display sum
25:         PutInt  AX
26:         nwln
27:   done:
28:         .EXIT
29:
30:   ;-----------------------------------------------------------
31:   ;Procedure sum receives two integers via the stack.
32:   ;The sum of the two integers is returned in AX.
33:   ;-----------------------------------------------------------
34:   sum:
35:         enter   0,0             ; save EBP
36:         mov     AX,[EBP+10]     ; sum = first number
37:         add     AX,[EBP+8]      ; sum = sum + second number
38:         leave                   ; restore EBP
39:         ret     4               ; return and clear parameters
```

Example 11.3 *Parameter passing by call-by-reference using the stack.*
This example shows how the stack can be used for parameter passing using the call-by-reference mechanism. The procedure swap receives two pointers to two characters and interchanges them. The program, shown in Program 11.4, requests a string from the user and displays the input string with the first two characters interchanged.

Program 11.4 Parameter passing by call-by-reference using the stack

```
 1:  ;Parameter passing via the stack                    PROCSWAP.ASM
 2:  ;
 3:  ;        Objective: To show parameter passing via the stack.
 4:  ;            Input: Requests a character string from the user.
 5:  ;           Output: Outputs the input string with the first
 6:  ;                   two characters swapped.
 7:
 8:  BUF_LEN     EQU  41          ; string buffer length
 9:  %include "io.mac"
10:
11:  .DATA
12:  prompt_msg  db    "Please input a string: ",0
13:  output_msg  db    "The swapped string is: ",0
14:
15:  .UDATA
16:  string      resb  BUF_LEN      ;input string < BUF_LEN chars.
17:
18:  .CODE
```

```
19:         .STARTUP
20:         PutStr  prompt_msg      ; request string input
21:         GetStr  string,BUF_LEN  ; read string from the user
22:
23:         mov     EAX,string      ; EAX = string[0] pointer
24:         push    EAX
25:         inc     EAX             ; EAX = string[1] pointer
26:         push    EAX
27:         call    swap            ; swaps the first two characters
28:         PutStr  output_msg      ; display the swapped string
29:         PutStr  string
30:         nwln
31:   done:
32:         .EXIT
33:
34:   ;-----------------------------------------------------------
35:   ;Procedure swap receives two pointers (via the stack) to
36:   ;characters of a string. It exchanges these two characters.
37:   ;-----------------------------------------------------------
38:   .CODE
39:   swap:
40:         enter   0,0
41:         push    EBX             ; save EBX - procedure uses EBX
42:         ; swap begins here. Because of xchg, AL is preserved.
43:         mov     EBX,[EBP+12]    ; EBX = first character pointer
44:         xchg    AL,[EBX]
45:         mov     EBX,[EBP+8]     ; EBX = second character pointer
46:         xchg    AL,[EBX]
47:         mov     EBX,[EBP+12]    ; EBX = first character pointer
48:         xchg    AL,[EBX]
49:         ; swap ends here
50:         pop     EBX             ; restore registers
51:         leave
52:         ret     8               ; return and clear parameters
```

In preparation for calling `swap`, the `main` procedure places the addresses of the first two characters of the input string on the stack (lines 23 to 26). The `swap` procedure, after saving the EBP register as in the last example, can access the pointers of the two characters at EBP + 8 and EBP + 12. Since the procedure uses the EBX register, we save it on the stack as well. Note that, once the EBP is pushed onto the stack and the ESP value is copied to EBP, the two parameters (i.e., the two character pointers in this example) are available at EBP + 8 and EBP + 12, irrespective of the other stack push operations in the procedure. This is important from the program maintenance point of view.

Summary

The stack is a last-in-first-out data structure that plays an important role in procedure invocation and execution. It supports two operations: push and pop. Only the element at the top-of-stack is

directly accessible through these operations. The stack segment is used to implement the stack. The top-of-stack is represented by SS:ESP. In the implementation, the stack grows toward lower memory addresses (i.e., grows downward).

The stack serves three main purposes: temporary storage of data, transfer of control during a procedure call and return, and parameter passing.

When writing procedures in the assembly language, parameter passing has to be explicitly handled. Parameter passing can be done via registers or the stack. Although the register method is efficient, the stack-based method is more general. We have used several examples to illustrate the register-based and stack-based parameter passing.

12

More on Procedures

We introduced the basics of the assembly language procedures in the last chapter. We have discussed the two parameter passing mechanisms used in invoking procedures. However, we did not discuss how local variables, declared in a procedure, are handled in the assembly language. We start this chapter with a discussion of this topic.

Although short assembly language programs can be stored in a single file, real application programs are likely to be broken into several files, called modules. The issues involved in writing and assembling multiple source program modules are discussed in detail.

Most high-level languages use procedures that receive a fixed number of arguments. However, languages like C support variable number of arguments. By means of an example, we look at how we can pass a variable number of arguments to a procedure. It turns out that passing a variable number of arguments is straightforward using the stack. The last section provides a summary of the chapter.

Introduction

This chapter builds on the material presented in the last chapter. Specifically, we focus on three issues: handling local variables, splitting a program into multiple modules, and passing a variable number of arguments.

In the last chapter, we did not consider how local variables can be used in a procedure. To focus our discussion, let us look at the following C code:

```
int compute(int a, int b)
{
   int   temp, N;
         . . .
         . . .
}
```

The variables `temp` and `N` are local variables whose scope is limited to the `compute` procedure. These variable come into existence when the `compute` procedure is invoked and disappear when the procedure terminates. Like the parameter passing mechanism, we can use either registers or the stack to store the local variables. We discuss these two methods and their pros and cons in the next section.

In the assembly language programs we have seen so far, the entire assembly language program is in a single file. This is fine for short example programs. Real application programs, however, tend to be large, consisting of hundreds of procedures. Rather than keeping such a massive source program in a single file, it is advantageous to break it up into several small pieces, where each piece of the source code is stored in a separate file or *module*. There are three advantages associated with multimodule programs:

- The chief advantage is that, after modifying a source module, it is only necessary to reassemble that module. On the other hand, if you keep only a single file, the whole file has to be reassembled.
- Making modifications to the source code is easier with several small files.
- It is safer to edit a short file; any unintended modifications to the source file are limited to a single small file.

After discussing the local variable issues, we describe in detail the mechanism involved in creating programs with multiple modules.

Most of the procedures we write receive a fixed number of arguments. These procedures always receive the same number of arguments. However, procedures in C can be defined with a variable number of parameters. In these procedures, the number of arguments passed can vary from call to call. For example, a procedure may receive only two arguments in one call but may receive five arguments in another. The input and output functions, `scanf` and `printf`, are the two common procedures that take a variable number of arguments. In this type of procedures, the called procedure does not know the number of arguments passed onto it. Usually, the first argument specifies this number. Using an example, we show how we can write assembly language procedures that can receive a variable number of arguments.

Local Variables

In the `compute` procedure, the local variables `temp` and `N` are dynamic. How do we store them in our assembly language programs? One alternative is to use the processor registers. Even though this method is efficient, it is not suitable for all procedures. The register method can be used for the leaf procedures[1]. Even here, the limited number of registers may cause problems.

To avoid these problems, we could reserve space for the local variables in our data segment. However, such a space allocation is not desirable for two main reasons:

1. Space allocation done in the data segment is static and remains active even when the procedure is not. However, these local variables are supposed to disappear when the procedure is terminated.
2. More importantly, it does not work with nonleaf and recursive procedures. Note that the recursive procedures call themselves either directly or indirectly. We discuss recursive procedures in Chapter 19.

For these reasons, space for local variables is reserved on the stack. For the C `compute` function, Figure 12.1 shows the contents of the stack frame. In high-level languages, it is also referred to as the *activation record* because each procedure activation requires all this information. The EBP value, also called the *frame pointer*, allows us to access the contents of the stack frame.

[1] A leaf procedure is a procedure that does not call another procedure while a nonleaf procedure does.

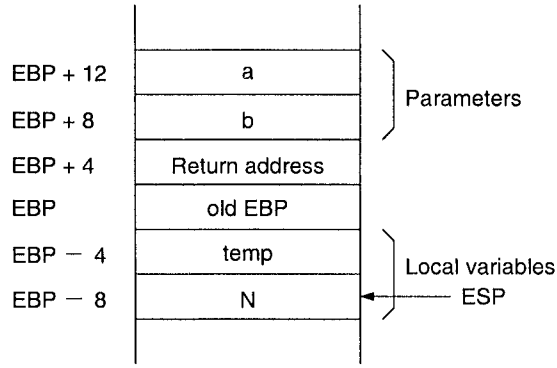

Figure 12.1 Activation record for the `compute` function.

For example, parameters `a` and `b` can be accessed at EBP + 12 and EBP + 8, respectively. Local variables `temp` and `N` can be accessed at EBP − 4 and EBP − 8, respectively.

To aid program readability, we can use the `%define` directive to name the stack locations. Then we can write

```
mov     EBX,a
mov     temp,EAX
```

instead of

```
mov     EBX,[EBP+12]
mov     [EBP-4],EAX
```

after establishing `temp` and `a` labels by using the `%define` directive, as shown below.

```
%define   a     dword [EBP+12]
%define   temp  dword [EBP-4]
```

Next we look at an example that computes the Fibonacci numbers.

Our First Program

In this example, we write a procedure to compute the largest Fibonacci number that is less than or equal to a given input number. The Fibonacci sequence of numbers is defined as

$$\begin{aligned}&\text{fib}(1) = 1,\\&\text{fib}(2) = 1,\\&\text{fib}(n) = \text{fib}(n-1) + \text{fib}(n-2) \text{ for } n > 2.\end{aligned}$$

In other words, the first two numbers in the Fibonacci sequence are 1. The subsequent numbers are obtained by adding the previous two numbers in the sequence. Thus,

$$1, 1, 2, 3, 5, 8, 13, 21, 34, \ldots,$$

is the Fibonacci sequence of numbers.

The listing for this example is given in Program 12.1. The `main` procedure requests the input number and passes it on to the `fibonacci` procedure. The `fibonacci` procedure keeps the last two Fibonacci numbers in local variables. We use the stack for storing these two Fibonacci numbers. The variable `FIB_LO` corresponds to fib($n-1$) and `FIB_HI` to fib(n).

The `fib_loop` on lines 43–50 successively computes the Fibonacci number until it is greater than or equal to the input number. Then the Fibonacci number in EAX is returned to the `main` procedure.

Program 12.1 Fibonacci number computation with local variables mapped to the stack

```
 1:  ;Fibonacci numbers                                    PROCFIB.ASM
 2:  ;
 3:  ;        Objective: To compute Fibonacci number using the stack
 4:  ;                   for local variables.
 5:  ;            Input: Requests a positive integer from the user.
 6:  ;           Output: Outputs the largest Fibonacci number that
 7:  ;                   is less than or equal to the input number.
 8:  %include "io.mac"
 9:
10:  .DATA
11:  prompt_msg   db  "Please input a positive number (>1): ",0
12:  output_msg1  db  "The largest Fibonacci number less than "
13:               db  "or equal to ",0
14:  output_msg2  db  " is ",0
15:
16:  .CODE
17:        .STARTUP
18:        PutStr   prompt_msg     ; request input number
19:        GetLInt  EDX            ; EDX = input number
20:        call     fibonacci
21:        PutStr   output_msg1    ; print Fibonacci number
22:        PutLInt  EDX
23:        PutStr   output_msg2
24:        PutLInt  EAX
25:        nwln
26:  done:
27:        .EXIT
28:
29:  ;-----------------------------------------------------------
30:  ;Procedure fibonacci receives an integer in EDX and computes
31:  ;the largest Fibonacci number that is less than the input
32:  ;number. The Fibonacci number is returned in EAX.
33:  ;-----------------------------------------------------------
34:  %define FIB_LO  dword [EBP-4]
35:  %define FIB_HI  dword [EBP-8]
36:  fibonacci:
37:        enter   8,0             ; space for two local variables
38:        push    EBX
39:        ; FIB_LO maintains the smaller of the last two Fibonacci
40:        ;  numbers computed; FIB_HI maintains the larger one.
```

```
41:         mov     FIB_LO,1        ; initialize FIB_LO and FIB_HI to
42:         mov     FIB_HI,1        ;  first two Fibonacci numbers
43:   fib_loop:
44:         mov     EAX,FIB_HI      ; compute next Fibonacci number
45:         mov     EBX,FIB_LO
46:         add     EBX,EAX
47:         mov     FIB_LO,EAX
48:         mov     FIB_HI,EBX
49:         cmp     EBX,EDX         ; compare with input number in EDX
50:         jle     fib_loop        ; if not greater, find next number
51:         ; EAX contains the required Fibonacci number
52:         pop     EBX
53:         leave                   ; clears local variable space
54:         ret
```

The code

```
push    EBP
mov     EBP,ESP
sub     ESP,8
```

saves the EBP value and copies the ESP value into the EBP as usual. It also decrements the ESP by 8, thus creating 8 bytes of storage space for the two local variables `FIB_LO` and `FIB_HI`. This three-instruction sequence can be replaced by the

```
enter   8,0
```

instruction (line 37). As mentioned before, the first operand specifies the number of bytes reserved for local variables. At this point, the stack allocation is

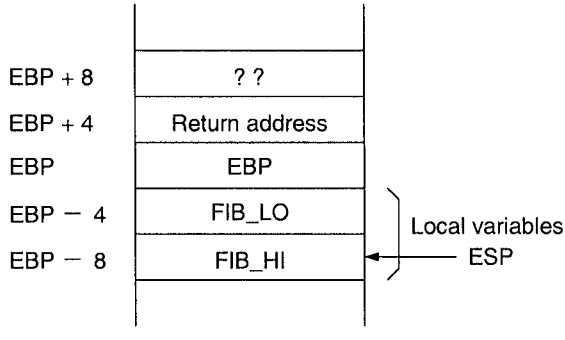

The two local variables can be accessed at EBP − 4 and EBP − 8. The two `%define` statements, on lines 34 and 35, conveniently establish labels for these two locations. We can clear the local variable space and restore the EBP value by

```
mov     ESP,EBP
pop     EBP
```

instructions. The `leave` instruction performs exactly the same. Thus, the `leave` instruction on line 53 automatically clears the local variable space. The rest of the code is straightforward to follow.

Multiple Source Program Modules

We discussed the advantages of multimodule programs at the beginning of this chapter. If we want to write multimodule assembly language programs, we have to precisely specify the intermodule interface. For example, if a procedure is called in the current module but is defined in another module, we have to state this fact so that the assembler does not flag such procedure calls as errors. Assemblers provide two directives—`global` and `extern`—to facilitate separate assembly of source modules. These two directives are discussed next.

GLOBAL Directive The `global` directive makes the associated label(s) available to other modules of the program. The format is

```
global    label1, label2, ...
```

Almost any label can be made public. This includes procedure names, memory variables, and equated labels, as shown in the following example:

```
global  error_msg, total, sample
                . . .
                . . .
.DATA
error_msg   db    'Out of range!',0
total       dw    0
            . . .
            . . .
.CODE
            . . .
            . . .
sample:
            . . .
            . . .
            ret
```

Microsoft and Borland assemblers use PUBLIC directive for this purpose.

EXTERN Directive The `extern` directive can be used to tell the assembler that certain labels are not defined in the current source file (i.e., module), but can be found in other modules. Thus, the assembler leaves "holes" in the corresponding object file that the linker will fill in later. The format is

```
extern    label1, label2, ...
```

where `label1` and `label2` are labels that are made public by a `global` directive in some other module.

Illustrative Examples

We present two examples to show how the `global` and `extern` directives are used to create multimodule programs in the assembly language.

Example 12.1 *A two-module example to find string length.*
We now present a simple example that reads a string from the user and displays the string length (i.e., number of characters in the string). The source code consists of two procedures: `main` and `string_length`. The `main` procedure is responsible for requesting and displaying the string length information. It uses `GetStr`, `PutStr`, and `PutInt` I/O routines. The `string_length` procedure computes the string length.

The source program is split into two modules: the `main` procedure is in the `module1.asm` file, and the `string_length` procedure is in the `module2.asm` file. Program 12.2 gives a listing of `module1.asm`. Notice that on line 18, we declare `string_length` as an externally defined procedure by using the `extern` directive.

Program 12.2 The `main` procedure defined in `module1.asm` calls the `sum` procedure defined in `module2.asm`

```
 1:  ;Multimodule program for string length          MODULE1.ASM
 2:  ;
 3:  ;        Objective: To show parameter passing via registers.
 4:  ;            Input: Requests two integers from keyboard.
 5:  ;           Output: Outputs the sum of the input integers.
 6:
 7:  BUF_SIZE  EQU  41    ; string buffer size
 8:  %include "io.mac"
 9:
10:  .DATA
11:  prompt_msg   db   "Please input a string: ",0
12:  length_msg   db   "String length is: ",0
13:
14:  .UDATA
15:  string1      resb   BUF_SIZE
16:
17:  .CODE
18:  extern   string_length
19:        .STARTUP
20:        PutStr  prompt_msg      ; request a string
21:        GetStr  string1,BUF_SIZE  ; read string input
22:
23:        mov     EBX,string1     ; EBX := string pointer
24:        call    string_length   ; returns string length in AX
25:        PutStr  length_msg      ; display string length
26:        PutInt  AX
27:        nwln
28:  done:
29:        .EXIT
```

Program 12.3 gives the `module2.asm` program listing. This module consists of a single procedure. By using the `global` directive, we make this procedure global (line 10) so that other modules can access it. The `string_length` procedure receives a pointer to a NULL-terminated string in EBX and returns the length of the string in EAX. The procedure preserves all registers except for EAX.

Program 12.3 This module defines the `sum` procedure called by `main`

```
 1:  ;String length procedure                          MODULE2.ASM
 2:  ;
 3:  ;          Function: To write a procedure to compute string
 4:  ;                    length of a NULL-terminated string.
 5:  ;          Receives: String pointer in the EBX register.
 6:  ;           Returns: Returns string length in AX.
 7:  %include "io.mac"
 8:
 9:  .CODE
10:  global string_length
11:  string_length:
12:        ; all registers except AX are preserved
13:        push    ESI             ; save ESI
14:        mov     ESI,EBX         ; ESI = string pointer
15:  repeat:
16:        cmp     byte [ESI],0    ; is it NULL?
17:        je      done            ; if so, done
18:        inc     ESI             ; else, move to next character
19:        jmp     repeat          ;       and repeat
20:  done:
21:        sub     ESI,EBX         ; compute string length
22:        mov     AX,SI           ; return string length in AX
23:        pop     ESI             ; restore ESI
24:        ret
```

We can assemble each source code module separately producing the corresponding object file. We can then link the object files together to produce a single executable file. For example, using the NASM assembler, the following sequence of commands

```
nasm  -f elf module1.asm                      ← Produces module1.o
nasm  -f elf module2.asm                      ← Produces module2.o
ld -s -o module module1.o module2.o io.o      ← Produces module
```

produces the executable file `module`. Note that the above sequence assumes that you have the `io.o` file in your current directory.

Example 12.2 *Bubble sort procedure.*
There are several algorithms to sort an array of numbers. The algorithm we use here is called the *bubble sort* algorithm. We assume that the array is to be sorted in ascending order. The bubble

```
        Initial state:  4 3 5 1 2
After 1st comparison:  3 4 5 1 2 (4 and 3 swapped)
After 2nd comparison:  3 4 5 1 2 (no swap)
After 3rd comparison:  3 4 1 5 2 (5 and 1 swapped)
   End of first pass:  3 4 1 2 5 (5 and 2 swapped)
```

Figure 12.2 Actions taken during the first pass of the bubble sort algorithm.

```
        Initial state:  4 3 5 1 2
       After 1st pass:  3 4 1 2 5 (5 in its final position)
       After 2nd pass:  3 1 2 4 5 (4 in its final position)
       After 3rd pass:  1 2 3 4 5 (array in sorted order)
After the final pass:  1 2 3 4 5 (final pass to check)
```

Figure 12.3 Behavior of the bubble sort algorithm.

sort algorithm consists of several passes through the array. Each pass scans the array, performing the following actions:

- Compare adjacent pairs of data elements;
- If they are out of order, swap them.

The algorithm terminates if, during a pass, no data elements are swapped. Even if a single swap is done during a pass, it will initiate another pass to scan the array.

Figure 12.2 shows the behavior of the algorithm during the first pass. The algorithm starts by comparing the first and second data elements (4 and 3). Since they are out of order, 4 and 3 are interchanged. Next, the second data element 4 is compared with the third data element 5, and no swapping takes place as they are in order. During the next step, 5 and 1 are compared and swapped and finally 5 and 2 are swapped. This terminates the first pass. The algorithm has performed $N - 1$ comparisons, where N is the number of data elements in the array. At the end of the first pass, the largest data element 5 is moved to its final position in the array.

Figure 12.3 shows the state of the array after each pass. Notice that after the first pass, the largest number (5) is in its final position. Similarly, after the second pass, the second largest number (4) moves to its final position, and so on. This is why this algorithm is called the bubble sort: during the first pass, the largest element bubbles to the top, the second largest bubbles to the top during the second pass, and so on. Even though the array is in sorted order after the third pass, one more pass is required by the algorithm to detect this.

The number of passes required to sort an array depends on how unsorted the initial array is. If the array is in sorted order, only a single pass is required. At the other extreme, if the array is completely unsorted (i.e., elements are initially in the descending order), the algorithm requires the maximum number of passes equal to one less than the number of elements in the array. The pseudocode for the bubble sort algorithm is shown in Figure 12.4.

The bubble sort program requests a set of up to 20 nonzero integers from the user and displays them in sorted order. The input can be terminated earlier by typing a zero.

We divide the bubble sort program into four modules, surely an overkill but it gives us an opportunity to practice multimodule programming. The main program calls three procedures to perform the bubble sort:

```
bubble_sort (arrayPointer, arraySize)
    status := UNSORTED
    #comparisons := arraySize
    while (status = UNSORTED)
        #comparisons := #comparisons − 1
        status := SORTED
        for (i = 0 to #comparisons)
            if (array[i] > array[i+1])
                swap ith and (i + 1)th elements of the array
                status := UNSORTED
            end if
        end for
    end while
end bubble_sort
```

Figure 12.4 Pseudocode for the bubble sort algorithm.

- `array_read` procedure: This procedure reads the input numbers into the array to be sorted.
- `array_output` procedure: This procedure outputs the sorted array.
- `bubble_sort` procedure: This procedure sorts the array in ascending order using the bubble sort algorithm.

The main program listing is shown in Program 12.4. It first calls the `read_array` procedure to fill the array with nonzero integers. The `read_array` procedure returns the actual number of values read into the array in the EAX register. If this value is zero, implying that no input was given, the program terminates after displaying an appropriate message. Otherwise, the array pointer and its size are passed onto the bubble sort procedure. After returning from this procedure, the `array_output` procedure is called to display the sorted array.

Program 12.4 Main program of the bubble sort program

```
;Bubble sort procedure                          BBLMAIN.ASM
;     Objective: To implement the bubble sort algorithm.
;         Input: A set of nonzero integers to be sorted.
;                Input is terminated by entering zero.
;        Output: Outputs the numbers in ascending order.

%define    CRLF  0DH,0AH
MAX_SIZE   EQU   20
%include "io.mac"
.DATA
prompt_msg  db  "Enter nonzero integers to be sorted.",CRLF
            db  "Enter zero to terminate the input.",0
output_msg  db  "Input numbers in ascending order:",0
error_msg   db  "No input entered.",0

```

```
16:  .UDATA
17:  array        resd  MAX_SIZE    ; input array for integers
18:
19:  .CODE
20:  extern   bubble_sort
21:  extern   read_array
22:  extern   output_array
23:
24:        .STARTUP
25:        PutStr  prompt_msg      ; request input numbers
26:        nwln
27:        mov     EBX,array       ; EBX = array pointer
28:        mov     ECX,MAX_SIZE    ; ECX = array size
29:
30:        call    read_array      ; reads input into the array
31:        ; returns the number of values read in EAX
32:
33:        cmp     EAX,0           ; if no input is given
34:        ja      input_OK        ; display error message
35:        PutStr  error_msg
36:        nwln
37:        jmp     short done
38:  input_OK:
39:        push    EAX             ; push array size onto stack
40.        push    array           ; place array pointer on stack
41:        call    bubble_sort
42:
43:        PutStr  output_msg      ; display sorted input numbers
44:        nwln
45:        mov     EBX,array
46:        mov     ECX,EAX         ; EAX has the number count
47:        call    output_array
48:  done:
49:        .EXIT
```

The `read_array` procedure, shown in Program 15.1, receives the array pointer in EBX and the maximum array size in the ECX register. It reads at most maximum array size values. The loop instruction on line 24 takes care of this condition. The input can also be terminated earlier by entering a zero. The zero input condition is detected and the loop is terminated by the statements on lines 19 and 20. The EDX register is used to keep track of the number of input values received from the user. This value is returned to the main program via the EAX register (line 26).

Program 12.5 Read array procedure

```
1:  ;Array read procedure                          BBLREAD.ASM
2:  ;       Function: To read a set of nonzero integers values
3:  ;                 into an array.
4:  ;                 Input is terminated by entering zero.
5;  ;       Receives: EBX = array pointer
```

```
 6:  ;                ECX = array size
 7:  ;        Returns: EAX = number of values read.
 8:  %include "io.mac"
 9:
10:  .CODE
11:  global   read_array
12:
13:  read_array:
14:        push    EDX
15:        push    EBX
16:        sub     EDX,EDX          ; number count = 0
17:  read_loop:
18:        GetLInt EAX              ; read input number
19:        cmp     EAX,0            ; if the number is zero
20:        je      read_done        ; no more numbers to read
21:        mov     [EBX],EAX        ; copy the number into array
22:        add     EBX,4            ; EBX points to the next element
23:        inc     EDX              ; increment number count
24:        loop    read_loop        ; reads a max. of MAX_SIZE numbers
25:  read_done:
26:        mov     EAX,EDX          ; returns the # of values read
27:        pop     EBX
28:        pop     EDX
29:        ret
```

The `array_output` procedure (Program 12.6) receives the array pointer in the EBX register and the array size in the ECX register. It uses the loop on lines 14–18 to display the sorted array.

Program 12.6 Output array procedure

```
 1:  ;Array output procedure                BBLOUTPUT.ASM
 2:  ;      Function: To output the values of an array.
 3:  ;      Receives: EBX = array pointer
 4:  ;                ECX = array size
 5:  ;       Returns: None.
 6:  %include "io.mac"
 7:
 8:  .CODE
 9:  global   output_array
10:
11:  output_array:
12:        push    EBX
13:        push    ECX
14:  print_loop:
15:        PutLInt [EBX]
16:        nwln
17:        add     EBX,4
18:        loop    print_loop
19:        pop     ECX
```

```
        pop     EBX
        ret
```

The bubble_sort procedure receives the array size and a pointer to the array. In the bubble_sort procedure, the ECX register is used to keep track of the number of comparisons while EDX maintains the status information. The ESI register points to the *i*th element of the input array.

Program 12.7 Bubble sort procedure to sort integers in ascending order

```
;-----------------------------------------------------------
;This procedure receives a pointer to an array of integers
;and the size of the array via the stack. It sorts the
;array in ascending order using the bubble sort algorithm.
;-----------------------------------------------------------
%include "io.mac"

SORTED    EQU   0
UNSORTED  EQU   1
.CODE
global  bubble_sort
bubble_sort:
      pushad
      mov     EBP,ESP

      ; ECX serves the same purpose as the end_index variable
      ; in the C procedure. ECX keeps the number of comparisons
      ; to be done in each pass. Note that ECX is decremented
      ; by 1 after each pass.
      mov     ECX, [EBP+40]   ; load array size into ECX

next_pass:
      dec     ECX             ; if # of comparisons is zero
      jz      sort_done       ; then we are done
      mov     EDI,ECX         ; else start another pass

      ;DL is used to keep SORTED/UNSORTED status
      mov     DL,SORTED       ; set status to SORTED

      mov     ESI,[EBP+36]    ; load array address into ESI
      ; ESI points to element i and ESI+4 to the next element
pass:
      ; This loop represents one pass of the algorithm.
      ; Each iteration compares elements at [ESI] and [ESI+4]
      ; and swaps them if ([ESI]) < ([ESI+4]).

      mov     EAX,[ESI]
      mov     EBX,[ESI+4]
      cmp     EAX,EBX
```

```
40:         jg      swap
41:
42:   increment:
43:         ; Increment ESI by 4 to point to the next element
44:         add     ESI,4
45:         dec     EDI
46:         jnz     pass
47:
48:         cmp     EDX,SORTED      ; if status remains SORTED
49:         je      sort_done       ; then sorting is done
50:         jmp     next_pass       ; else initiate another pass
51:
52:   swap:
53:         ; swap elements at [ESI] and [ESI+4]
54:         mov     [ESI+4],EAX     ; copy [ESI] in EAX to [ESI+4]
55:         mov     [ESI],EBX       ; copy [ESI+4] in EBX to [ESI]
56:         mov     EDX,UNSORTED    ; set status to UNSORTED
57:         jmp     increment
58:
59:   sort_done:
60:         popad
61:         ret     8
```

The `while` loop condition is tested by lines 48 to 50. The `for` loop body corresponds to lines 37 to 46 and 54 to 57. The rest of the code follows the pseudocode. Note that the array pointer is available in the stack at EBP + 36 and its size at EBP + 40, as we use `pushad` to save all registers.

Procedures with Variable Number of Parameters

In assembly language procedures, a variable number of parameters can be easily handled by the stack method of parameter passing. Only the stack size imposes a limit on the number of arguments that can be passed. The next example illustrates the use of the stack to pass a variable number of arguments in assembly language programs.

Example 12.3 *Passing a variable number of arguments via the stack.*
In this example, the `variable_sum` procedure receives a variable number of integers via the stack. The actual number of integers passed is the last argument pushed onto the stack before calling the procedure. The procedure finds the sum of the integers and returns this value in the EAX register.

The `main` procedure in Program 12.8 requests input from the user. Only nonzero values are accepted as valid input (entering a zero terminates the input). The `read_number` loop (lines 24 to 30) reads input numbers using `GetLInt` and pushes them onto the stack. The ECX register keeps a count of the number of input values, which is passed as the last parameter (line 32) before calling the `variable_sum` procedure. The state of the stack at line 53, after executing the `enter` instruction, is shown in Figure 12.5.

The `variable_sum` procedure first reads the number of parameters passed onto it from the stack at EBP + 8 into the ECX register. The `add_loop` (lines 60 to 63) successively reads each

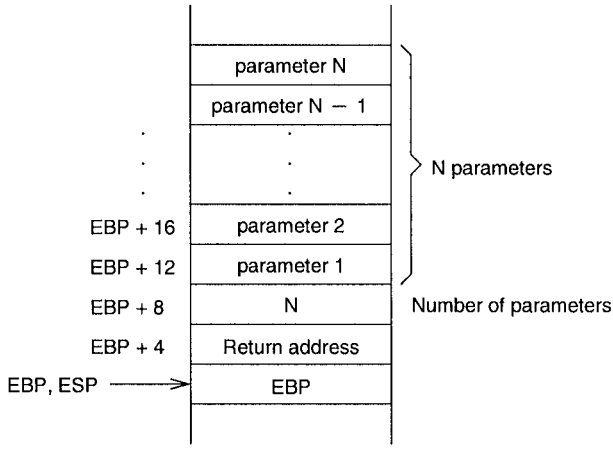

Figure 12.5 State of the stack after executing the `enter` statement.

integer from the stack and computes their sum in the EAX. Note that on line 61 we use a segment override prefix. If we write

```
add     EAX,[EBX]
```

the contents of the EBX are treated as the offset value into the data segment. However, our parameters are located in the stack segment. Therefore, it is necessary to indicate that the offset in EBX is relative to SS (and not DS) by using the SS: segment override prefix (line 61). The segment override prefixes—CS:, DS:, ES:, FS:, GS:, and SS:—can be placed in front of a memory operand to indicate a segment other than the default segment.

Program 12.8 A program to illustrate passing a variable number of parameters

```
 1:  ;Variable number of parameters passed via stack   VARPARA.ASM
 2:  ;
 3:  ;        Objective: To show how variable number of parameters
 4:  ;                   can be passed via the stack.
 5:  ;            Input: Requests variable number of nonzero integers.
 6:  ;                   A zero terminates the input.
 7:  ;           Output: Outputs the sum of input numbers.
 8:
 9:  %define CRLF   0DH,0AH    ; carriage return and line feed
10:
11:  %include "io.mac"
12:
13:  .DATA
14:  prompt_msg  db  "Please input a set of nonzero integers.",CRLF
15:              db  "You must enter at least one integer.",CRLF
16:              db  "Enter zero to terminate the input.",0
17:  sum_msg     db  "The sum of the input numbers is: ",0
18:
```

```
.CODE
        .STARTUP
        PutStr  prompt_msg      ; request input numbers
        nwln
        sub     ECX,ECX         ; ECX keeps number count
read_number:
        GetLInt EAX             ; read input number
        cmp     EAX,0           ; if the number is zero
        je      stop_reading    ; no more nuumbers to read
        push    EAX             ; place the number on stack
        inc     ECX             ; increment number count
        jmp     read_number
stop_reading:
        push    ECX             ; place number count on stack
        call    variable_sum    ; returns sum in EAX
        ; clear parameter space on the stack
        inc     ECX             ; increment ECX to include count
        add     ECX,ECX         ; ECX = ECX * 4 (space in bytes)
        add     ECX,ECX
        add     ESP,ECX         ; update ESP to clear parameter
                                ; space on the stack
        PutStr  sum_msg         ; display the sum
        PutLInt EAX
        nwln
done:
        .EXIT

;-------------------------------------------------------------
;This procedure receives variable number of integers via the
;stack. The last parameter pushed on the stack should be
;the number of integers to be added. Sum is returned in EAX.
;-------------------------------------------------------------
variable_sum:
        enter   0,0
        push    EBX             ; save EBX and ECX
        push    ECX

        mov     ECX,[EBP+8]     ; ECX = # of integers to be added
        mov     EBX,EBP
        add     EBX,12          ; EBX = pointer to first number
        sub     EAX,EAX         ; sum = 0
add_loop:
        add     EAX,[SS:EBX]    ; sum = sum + next number
        add     EBX,4           ; EBX points to the next integer
        loop    add_loop        ; repeat count in ECX

        pop     ECX             ; restore registers
        pop     EBX
        leave
        ret                     ; parameter space cleared by main
```

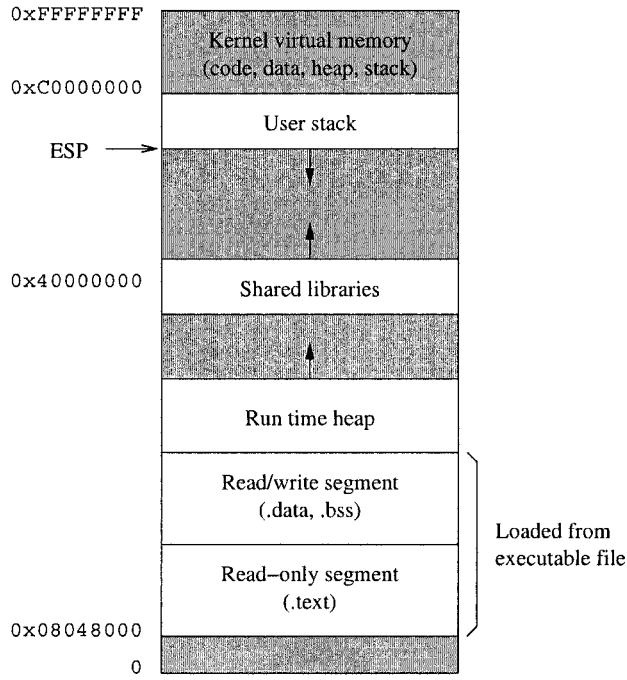

Figure 12.6 Memory layout of a Linux process.

A Few Notes

1. If you are running this program on a Linux system, you don't need the segment override prefix. The reason is that Linux and UNIX systems do not use the physical segmentation provided by the IA-32 architecture. Instead, these systems treat the memory as a single physical segment, which is partitioned into various logical segments. Figure 12.6 shows the memory layout for Linux. The bottom two segments are used for the code and data. For example, the code segment (`.text`) is placed in the bottom segment, which is a read-only segment. The next segment stores the data part (`.data` and `.bss`). The stack segment is placed below the kernel space.
2. In this example, we deliberately used the EBX to illustrate the use of segment override prefixes. We could have used the EBP itself to access the parameters. For example, the code

```
        add     EBP,12
        sub     EAX,EAX
add_loop:
        add     EAX,[EBP]
        add     EBP,4
        loop    add_loop
```

can replace the code at lines 58 to 63. A disadvantage of this modified code is that, since we have modified the EBP, we no longer can access, for example, the parameter count value

in the stack. For this example, however, this method works fine. A better way is to use an index register to represent the offset relative to the EBP. We defer this discussion to the next chapter, which discusses the addressing modes.

3. Another interesting feature is that the parameter space on the stack is cleared by `main`. Since we pass a variable number of parameters, we cannot use `ret` to clear the parameter space. This is done in `main` by lines 35 to 38. The ECX is first incremented to include the count parameter (line 35). The byte count of the parameter space is computed on lines 36 and 37. These lines effectively multiply ECX by four. This value is added to the ESP register to clear the parameter space (line 38).

Summary

We started this chapter with a discussion of local variables. Such variables are dynamic as these variables come into existence when the procedure is invoked and disappear when the procedure terminates. As with parameter passing, local variables of a procedure can be stored either in registers or on the stack. Due to the limited number of registers available, only a few local variables can be mapped to registers. The stack avoids this limitation, but it is slow. Furthermore, we cannot use the registers for local variable storage in nonleaf and recursive procedures.

Real application programs are unlikely to be short enough to keep in a single file. It is advantageous to break large source programs into more manageable chunks. Then we can keep each chunk in a separate file (i.e., modules). We have discussed how such multimodule programs are written and assembled into a single executable file.

We have also discussed how a variable number of arguments can be passed onto procedures in the assembly language. When the stack is used for parameter passing, passing a variable number of arguments is straightforward. We have demonstrated this by means of an example.

13

Addressing Modes

In assembly language, specification of data required by instructions can be done in a variety of ways. In Chapter 9 we discussed four different addressing modes: register, immediate, direct, and indirect. The last two addressing modes specify operands in memory. However, such memory operands can be specified by several other addressing modes. Here we give a detailed description of these memory addressing modes.

Arrays are important for organizing a collection of related data. Although one-dimensional arrays are straightforward to implement, multidimensional arrays are more involved. This chapter discusses these issues in detail. Several examples are given to illustrate the use of the addressing modes in processing one- and two-dimensional arrays.

Introduction

Addressing mode refers how we specify the location of an operand that is required by an instruction. An operand can be at any of the following locations: in a register, in the instruction itself, in the memory, or at an I/O port. Chapter 20 discusses how operands located at an I/O port can be specified. Here we concentrate on how we can specify operands located in the first three locations. The three addressing modes are:

- *Register Addressing Mode:* In this addressing mode, as discussed in Chapter 9, processor registers provide the input operands and results are stored back in registers. Since the IA-32 architecture uses a two-address format, one operand specification acts as both source and destination. This addressing mode is the best way of specifying operands, as the delay in accessing the operands is minimal.
- *Immediate Addressing Mode:* This addressing mode can be used to specify at most one source operand. The operand value is encoded as part of the instruction. Thus, the operand is available as soon as the instruction is read.
- *Memory Addressing Modes:* When an operand is in memory, a variety of addressing modes is provided to specify it. Recall that we have to specify the logical address in order to specify the location of a memory operand. The logical address consists of two components: segment base and offset. Note that the offset is also referred to as the effective address. Memory addressing modes differ in how they specify the effective address.

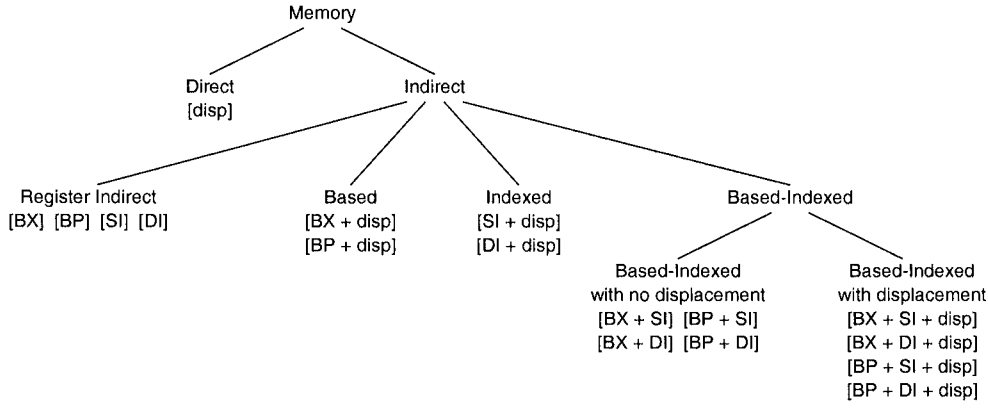

Figure 13.1 Memory addressing modes for 16-bit addresses.

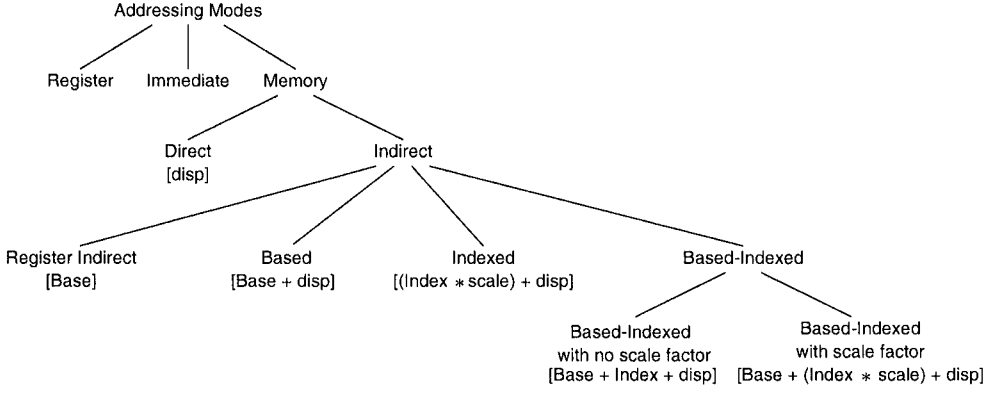

Figure 13.2 Addressing modes of the Pentium for 32-bit addresses.

We have already discussed the direct and register indirect addressing modes in Chapter 9. The direct addressing mode gives the effective address directly in the instruction. In the indirect addressing mode, the effective address is in one of the general-purpose registers. This chapter discusses the remaining memory addressing modes.

Memory Addressing Modes

The primary motivation for providing different addressing modes is to efficiently support high-level language constructs and data structures. The actual memory addressing modes available depend on the address size used (16 bits or 32 bits). The memory addressing modes available for 16-bit addresses are the same as those supported by the 8086. Figure 13.1 shows the default

Table 13.1 Differences between 16-bit and 32-bit addressing

	16-bit addressing	32-bit addressing
Base register	BX BP	EAX, EBX, ECX, EDX ESI, EDI, EBP, ESP
Index register	SI DI	EAX, EBX, ECX, EDX ESI, EDI, EBP
Scale factor	None	1, 2, 4, 8
Displacement	0, 8, 16 bits	0, 8, 32 bits

memory addressing modes available for 16-bit addresses. A more flexible set of addressing modes is supported for 32-bit addresses. These addressing modes are shown in Figure 13.2 and are summarized below:

Segment + Base + (Index * Scale) + displacement

CS	EAX	EAX	1	No displacement
SS	EBX	EBX	2	8-bit displacement
DS	ECX	ECX	4	32-bit displacement
ES	EDX	EDX	8	
FS	ESI	ESI		
GS	EDI	EDI		
	EBP	EBP		
	ESP			

The differences between 16-bit and 32-bit addressing are summarized in Table 13.1. How does the processor know whether to use 16- or 32-bit addressing? As discussed in Chapter 4, it uses the D bit in the CS segment descriptor to determine if the address is 16 or 32 bits long (see page 70). It is, however, possible to override these defaults by using the size override prefixes:

66H Operand size override prefix
67H Address size override prefix

By using these prefixes, we can mix 16- and 32-bit data and addresses. Remember that our assembly language programs use 32-bit data and addresses. This, however, does not restrict us from using 16-bit data and addresses. For example, when we write

```
mov     EAX,123
```

the assembler generates the following machine language code:

```
B8 0000007B
```

However, when we use a 16-bit operand as in

```
mov     AX,123
```

the following code is generated by the assembler:

```
66 | B8 007B
```

The assembler automatically inserts the operand size override prefix (66H). Similarly, we can use 16-bit addresses. For instance, consider the following example:

```
mov     EAX, [BX]
```

The assembler automatically inserts the address size override prefix (67H) as shown below:

```
67 | 8B 07
```

It is also possible to mix both override prefixes as demonstrated by the following example. The assembly language statement

```
mov     AX, [BX]
```

causes the assembler to insert both operand and address size override prefixes:

```
66 | 67 | 8B 07
```

Based Addressing

In the based addressing mode, one of the registers acts as the base register in computing the effective address of an operand. The effective address is computed by adding the contents of the specified base register with a signed displacement value given as part of the instruction. For 16-bit addresses, the signed displacement is either an 8- or a 16-bit number. For 32-bit addresses, it is either an 8- or a 32-bit number.

Based addressing provides a convenient way to access individual elements of a structure. Typically, a base register can be set up to point to the base of the structure and the displacement can be used to access an element within the structure. For example, consider the following record of a course schedule:

Course number	Integer	2 bytes
Course title	Character string	38 bytes
Term offered	Single character	1 byte
Room number	Character string	5 bytes
Enrollment limit	Integer	2 bytes
Number registered	Integer	2 bytes
Total storage per record		50 bytes

In this example, suppose we want to find the number of available spaces in a particular course. We can let the EBX register point to the base address of the corresponding course record and use displacement to read the number of students registered and the enrollment limit for the course to compute the desired answer. This is illustrated in Figure 13.3.

This addressing mode is also useful in accessing arrays whose element size is not 2, 4, or 8 bytes. In this case, the displacement can be set equal to the offset to the beginning of the array, and the base register holds the offset of a specific element relative to the beginning of the array.

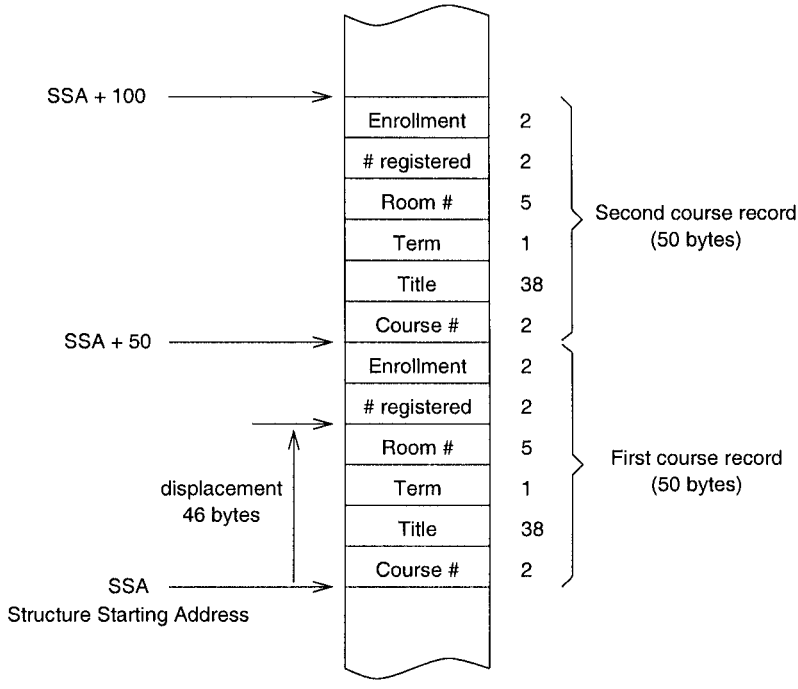

Figure 13.3 Course record layout in memory.

Indexed Addressing

In this addressing mode, the effective address is computed as

(Index * scale factor) + signed displacement.

For 16-bit addresses, no scaling factor is allowed (see Table 13.1 on page 275). For 32-bit addresses, a scale factor of 2, 4, or 8 can be specified. Of course, we can use a scale factor in the 16-bit addressing mode by using an address size override prefix.

The indexed addressing mode is often used to access elements of an array. The beginning of the array is given by the displacement, and the value of the index register selects an element within the array. The scale factor is particularly useful to access arrays whose element size is 2, 4, or 8 bytes.

The following are valid instructions using the indexed addressing mode to specify one of the operands.

```
add     EAX,[EDI+20]
mov     EAX,[marks_table+ESI*4]
add     EAX,[table1+ESI]
```

In the second instruction, the assembler would supply a constant displacement that represents the offset of `marks_table` in the data segment. Assume that each element of `marks_table` takes

four bytes. Since we are using a scale factor of four, ESI should have the index value. For example, if we want to access the tenth element, ESI should have nine as the index value starts with zero.

If no scale factor is used as in the last instruction, ESI should hold the offset of the element in *bytes* relative to the beginning of the array. For example, if `table1` is an array of four-byte elements, ESI register should have 36 to refer to the tenth element. By using the scale factor, we avoid such byte counting.

Based-Indexed Addressing

Based-Indexed with No Scale Factor In this addressing mode, the effective address is computed as

Base + Index + signed displacement.

The displacement can be a signed 8- or 16-bit number for 16-bit addresses; it can be a signed 8- or 32-bit number for 32-bit addresses.

This addressing mode is useful in accessing two-dimensional arrays with the displacement representing the offset to the beginning of the array. This mode can also be used to access arrays of records where the displacement represents the offset to a field in a record. In addition, this addressing mode is used to access arrays passed on to a procedure. In this case, the base register could point to the beginning of the array, and an index register can hold the offset to a specific element.

Assuming that EBX points to `table1`, which consists of four-byte elements, we can use the code

```
mov     EAX, [EBX+ESI]
cmp     EAX, [EBX+ESI+4]
```

to compare two successive elements of `table1`. This type of code is particularly useful if the `table1` pointer is passed as a parameter.

Based-Indexed with Scale Factor In this addressing mode, the effective address is computed as

Base + (Index $*$ scale factor) + signed displacement.

This addressing mode provides an efficient indexing mechanism into a two-dimensional array when the element size is 2, 4, or 8 bytes.

Arrays

Arrays are useful in organizing a collection of related data items, such as test marks of a class, salaries of employees, and so on. We have used arrays of characters to represent strings. Such arrays are one-dimensional: only a single subscript is necessary to access a character in the array. High-level languages support multidimensional arrays. In this section, we discuss both one-dimensional and multidimensional arrays.

One-Dimensional Arrays

A one-dimensional array of test marks can be declared in C as

```
int     test_marks [10];
```

In C, the subscript always starts at zero. Thus, `test_marks[0]` gives the first student's mark and `test_marks[9]` gives the last student's mark.

Array declaration in high-level languages specifies the following five attributes:

- Name of the array (`test_marks`),
- Number of the elements (10),
- Element size (4 bytes),
- Type of element (integer), and
- Index range (0 to 9).

From this information, the amount of storage space required for the array can be easily calculated. Storage space in bytes is given by

$$\text{Storage space} = \text{number of elements} * \text{element size in bytes.}$$

In our example, it is equal to $10 * 4 = 40$ bytes. In the assembly language, arrays are implemented by allocating the required amount of storage space. For example, the `test_marks` array can be declared as

```
test_marks    resd    10
```

An array name can be assigned to this storage space. But that is all the support you get in assembly language! It is up to you as a programmer to "properly" access the array taking the element size and the range of subscripts into account.

You need to know how the array is stored in memory in order to access elements of the array. For one-dimensional arrays, representation of the array in memory is rather direct: array elements are stored linearly in the same order as shown in Figure 13.4. In the remainder of this section, we use the convention used for arrays in C (i.e., subscripts are assumed to begin with 0).

To access an element we need to know its displacement value in bytes relative to the beginning of the array. Since we know the element size in bytes, it is rather straightforward to compute the displacement from the subscript value:

$$\text{displacement} = \text{subscript} * \text{element size in bytes.}$$

For example, to access the sixth student's mark (i.e., subscript is 5), you have to use $5 * 4 = 20$ as the displacement value into the `test_marks` array. Later we present an example that computes the sum of a one-dimensional integer array. If the array element size is 2, 4, or 8 bytes, we can use the scale factor to avoid computing displacement in bytes.

Multidimensional Arrays

Programs often require arrays of more than one dimension. For example, we need a two-dimensional array of size 50×3 to store test marks of a class of 50 students taking three tests during a semester. For most programs, arrays of up to three dimensions are adequate. In this section, we discuss how two-dimensional arrays are represented and manipulated in the assembly language. Our discussion can be generalized to higher-dimensional arrays.

For example, a 5×3 array to store test marks can be declared in C as

```
int    class_marks[5][3];    /* 5 rows and 3 columns */
```

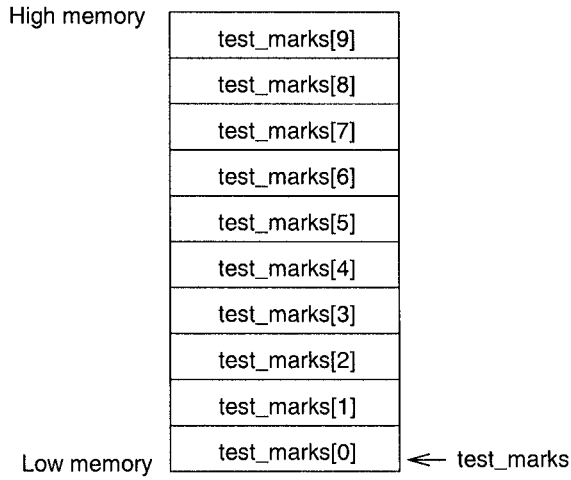

Figure 13.4 One-dimensional array storage representation.

Storage representation of such arrays is not as direct as that for one-dimensional arrays. Since the memory is one-dimensional (i.e., linear array of bytes), we need to transform the two-dimensional structure to a one-dimensional structure. This transformation can be done in one of two common ways:

- Order the array elements row-by-row, starting with the first row, or
- Order the array elements column-by-column, starting with the first column.

The first method, called the *row-major ordering*, is shown in Figure 13.5*a*. Row-major ordering is used in most high-level languages including C. The other method, called the *column-major ordering*, is shown in Figure 13.5*b*. Column-major ordering is used in FORTRAN. In the remainder of this section, we focus on the row-major ordering scheme.

Why do we need to know the underlying storage representation? When we are using a high-level language, we really do not have to bother about the storage representation. Access to arrays is provided by subscripts: one subscript for each dimension of the array. However, when using assembly language, we need to know the storage representation in order to access individual elements of the array for reasons discussed next.

In the assembly language, we can allocate storage space for the `class_marks` array as

```
class_marks     resd     5*3
```

This statement simply allocates the 60 bytes required to store the array. Now we need a formula to translate row and column subscripts to the corresponding displacement. In the C language, which uses row-major ordering and subscripts start with zero, we can express displacement of an element at row i and column j as

$$\text{displacement} = (i * \text{COLUMNS} + j) * \text{ELEMENT\_SIZE},$$

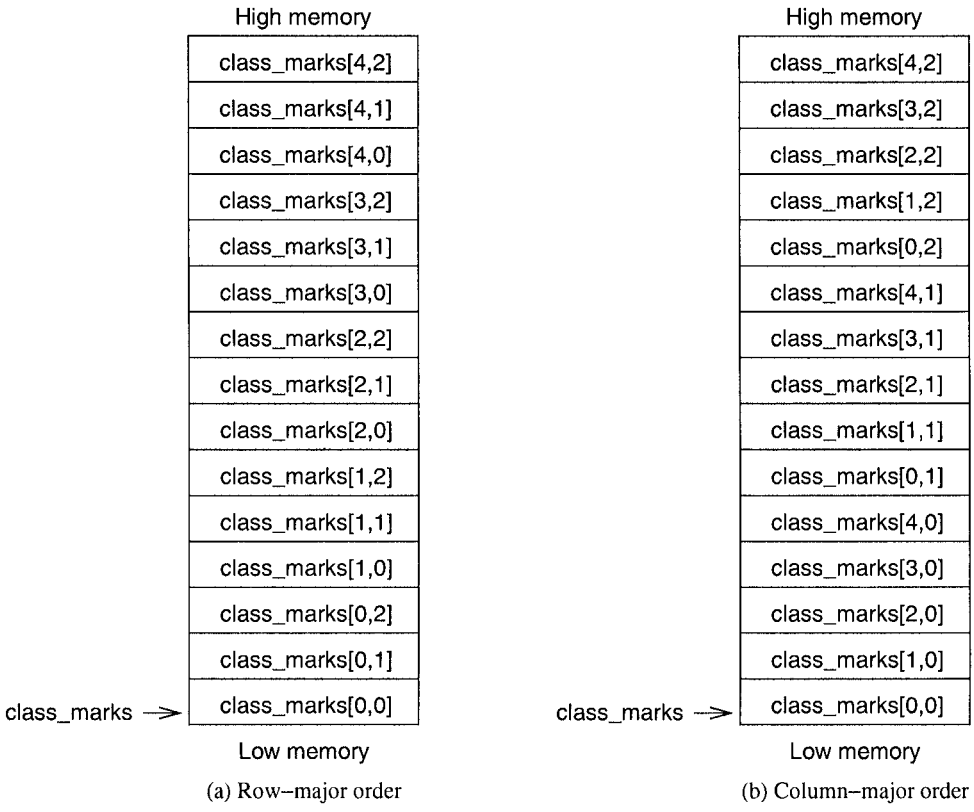

Figure 13.5 Two-dimensional array storage representation.

where COLUMNS is the number of columns in the array and ELEMENT_SIZE is the number of bytes required to store an element. For example, displacement of `class_marks[3,1]` is $(3 * 3 + 1) * 4 = 40$. Later we give an example to illustrate how two-dimensional arrays are manipulated.

Our First Program

This example demonstrates how one-dimensional arrays can be manipulated. Program 13.1 finds the sum of the `test_marks` array and displays the result.

Program 13.1 Computing the sum of a one-dimensional array

```
;Sum of a long integer array                    ARRAY_SUM.ASM
;
;        Objective: To find sum of all elements of an array.
```

```
 4:  ;              Input: None.
 5:  ;             Output: Displays the sum.
 6:  %include "io.mac"
 7:
 8:  .DATA
 9:  test_marks      DD  90,50,70,94,81,40,67,55,60,73
10:  NO_STUDENTS     EQU ($-test_marks)/4      ; number of students
11:  sum_msg         DB  'The sum of test marks is: ',0
12:
13:  .CODE
14:          .STARTUP
15:          mov     CX,NO_STUDENTS    ; loop iteration count
16:          sub     EAX,EAX           ; sum := 0
17:          sub     ESI,ESI           ; array index := 0
18:  add_loop:
19:          mov     EBX,[test_marks+ESI*4]
20:          PutLInt EBX
21:          nwln
22:          add     EAX,[test_marks+ESI*4]
23:          inc     ESI
24:          loop    add_loop
25:
26:          PutStr  sum_msg
27:          PutLInt EAX
28:          nwln
29:          .EXIT
```

Each element of the `test_marks` array, declared on line 9, requires four bytes. The array size `NO_STUDENTS` is computed on line 10 using the predefined location counter symbol $. The predefined symbol $ is always set to the current offset in the segment. Thus, on line 10, $ points to the byte after the array storage space. Therefore, `($-test_marks)` gives the storage space in bytes and dividing this by four gives the number of elements in the array. We are using the indexed addressing mode with a scale factor of four on lines 19 and 22. Remember that the scale factor is only allowed in the 32-bit mode.

Illustrative Examples

We now present several examples to illustrate the usefulness of the various addressing modes. The first example sorts an array of integers using the insertion sort algorithm, and the second example implements a binary search to locate a value in a sorted array. Our last example demonstrates how 2-dimensional array are manipulated in the assembly language.

Example 13.1 *Sorting an integer array using the insertion sort.*
This example requests a set of integers from the user and displays these numbers in sorted order. The main procedure reads a maximum of `MAX_SIZE` integers (lines 20 to 28). It accepts only nonnegative numbers. Entering a negative number terminates the input (lines 24 and 25).

The main procedure passes the array pointer and its size (lines 30 to 34) to the insertion sort procedure. The remainder of the main procedure displays the sorted array returned by the sort procedure. Note that the main procedure uses the indirect addressing mode on lines 26 and 41.

The basic principle behind the insertion sort is simple: insert a new number into the sorted array in its proper place. To apply this algorithm, we start with an empty array. Then insert the first number. Now the array is in sorted order with just one element. Next insert the second number in its proper place. This results in a sorted array of size two. Repeat this process until all the numbers are inserted. The pseudocode for this algorithm, shown below, assumes that the array index starts with 0:

```
insertion_sort (array, size)
    for (i = 1 to size−1)
        temp := array[i]
        j := i − 1
        while ((temp < array[j]) AND (j ≥ 0))
            array[j+1] := array[j]
            j := j − 1
        end while
        array[j+1] := temp
    end for
end insertion_sort
```

Here, index i points to the number to be inserted. The array to the left of i is in sorted order. The numbers to be inserted are the ones located at or to the right of index i. The next number to be inserted is at i. The implementation of the insertion sort procedure, shown in Program 13.2, follows the pseudocode.

Program 13.2 Insertion sort

```
 1:  ;Sorting an array by insertion sort                INS_SORT.ASM
 2:  ;
 3:  ;        Objective: To sort an integer array using insertion sort.
 4:  ;            Input: Requests numbers to fill array.
 5:  ;           Output: Displays sorted array.
 6:  %include "io.mac"
 7:
 8:  .DATA
 9:  MAX_SIZE       EQU 100
10:  input_prompt   db  "Please enter input array: "
11:                 db  "(negative number terminates input)",0
12:  out_msg        db  "The sorted array is:",0
13:
14:  .UDATA
15:  array          resd  MAX_SIZE
16:
17:  .CODE
18:          .STARTUP
19:          PutStr  input_prompt ; request input array
20:          mov     EBX,array
21:          mov     ECX,MAX_SIZE
```

```
array_loop:
        GetLInt EAX             ; read an array number
        cmp     EAX,0           ; negative number?
        jl      exit_loop       ; if so, stop reading numbers
        mov     [EBX],EAX       ; otherwise, copy into array
        add     EBX,4           ; increment array address
        loop    array_loop      ; iterates a maximum of MAX_SIZE
exit_loop:
        mov     EDX,EBX         ; EDX keeps the actual array size
        sub     EDX,array       ; EDX = array size in bytes
        shr     EDX,2           ; divide by 4 to get array size
        push    EDX             ; push array size & array pointer
        push    array
        call    insertion_sort
        PutStr  out_msg         ; display sorted array
        nwln
        mov     ECX,EDX
        mov     EBX,array
display_loop:
        PutLInt  [EBX]
        nwln
        add     EBX,4
        loop    display_loop
done:
        .EXIT

;-----------------------------------------------------------
; This procedure receives a pointer to an array of integers
; and the array size via the stack. The array is sorted by
; using insertion sort. All registers are preserved.
;-----------------------------------------------------------
%define   SORT_ARRAY   EBX
insertion_sort:
        pushad                  ; save registers
        mov     EBP,ESP
        mov     EBX,[EBP+36]    ; copy array pointer
        mov     ECX,[EBP+40]    ; copy array size
        mov     ESI,4           ; array left of ESI is sorted
for_loop:
        ; variables of the algorithm are mapped as follows.
        ; EDX = temp, ESI = i, and EDI = j
        mov     EDX,[SORT_ARRAY+ESI] ; temp = array[i]
        mov     EDI,ESI         ; j = i-1
        sub     EDI,4
while_loop:
        cmp     EDX,[SORT_ARRAY+EDI]   ; temp < array[j]
        jge     exit_while_loop
        ; array[j+1] = array[j]
        mov     EAX,[SORT_ARRAY+EDI]
        mov     [SORT_ARRAY+EDI+4],EAX
        sub     EDI,4           ; j = j-1
```

```
73:         cmp     EDI,0           ; j >= 0
74:         jge     while_loop
75:  exit_while_loop:
76:         ; array[j+1] = temp
77:         mov     [SORT_ARRAY+EDI+4],EDX
78:         add     ESI,4           ; i = i+1
79:         dec     ECX
80:         cmp     ECX,1           ; if ECX = 1, we are done
81:         jne     for_loop
82:  sort_done:
83:         popad                   ; restore registers
84:         ret     8
```

Since the sort procedure does not return any value to the main program in registers, we can use `pushad` (line 55) and `popad` (line 83) to save and restore registers. As `pushad` saves all eight registers on the stack, the offset is appropriately adjusted to access the array size and array pointer parameters (lines 57 and 58).

The `while` loop is implemented by lines 66 to 74, and the `for` loop is implemented by lines 60 to 81. Note that the array pointer is copied to the EBX (line 57), and line 53 assigns a convenient label to this. We have used the based-indexed addressing mode on lines 63, 67, and 70 without any displacement and on lines 71 and 77 with displacement. Based addressing is used on lines 57 and 58 to access parameters from the stack.

Example 13.2 *Binary search procedure.*
Binary search is an efficient algorithm to locate a value in a sorted array. The search process starts with the whole array. The value at the middle of the array is compared with the number we are looking for: if there is a match, its index is returned. Otherwise, the search process is repeated either on the lower half (if the number is less than the value at the middle), or on the upper half (if the number is greater than the value at the middle). The pseudocode of the algorithm is given below:

```
binary_search (array, size, number)
    lower := 0
    upper := size − 1
    while (lower ≤ upper)
        middle := (lower + upper)/2
        if (number = array[middle])
        then
            return (middle)
        else
            if (number < array[middle])
            then
                upper := middle − 1
            else
                lower := middle + 1
            end if
        end if
```

```
    end while
    return (0)      {number not found}
    end binary_search
```

The listing of the binary search program is given in Program 13.3. The main procedure is similar to that in the last example. In the binary search procedure, the lower and upper index variables are mapped to the AX and CX registers, respectively. The number to be searched is stored in the DX and the array pointer is in the EBX. Register SI keeps the middle index value.

Program 13.3 Binary search

```
 1:  ;Binary search of a sorted integer array      BIN_SRCH.ASM
 2:  ;
 3:  ;        Objective: To implement binary search of a sorted
 4:  ;                   integer array.
 5:  ;            Input: Requests numbers to fill array and a
 6:  ;                   number to be searched for from user.
 7:  ;           Output: Displays the position of the number in
 8:  ;                   the array if found; otherwise, not found
 9:  ;                   message.
10:  %include "io.mac"
11:
12:  .DATA
13:  MAX_SIZE       EQU 100
14:  input_prompt   db  "Please enter input array (in sorted order): "
15:                 db  "(negative number terminates input)",0
16:  query_number   db  "Enter the number to be searched: ",0
17:  out_msg        db  "The number is at position ",0
18:  not_found_msg  db  "Number not in the array!",0
19:  query_msg      db  "Do you want to quit (Y/N): ",0
20:
21:  .UDATA
22:  array          resw  MAX_SIZE
23:
24:  .CODE
25:          .STARTUP
26:          PutStr  input_prompt ; request input array
27:          nwln
28:          sub     ESI,ESI      ; set index to zero
29:          mov     CX,MAX_SIZE
30:  array_loop:
31:          GetInt  AX           ; read an array number
32:
33:          cmp     AX,0             ; negative number?
34:          jl      exit_loop        ; if so, stop reading numbers
35:          mov     [array+ESI*2],AX ; otherwise, copy into array
36:          inc     ESI          ; increment array index
37:          loop    array_loop   ; iterates a maximum of MAX_SIZE
38:  exit_loop:
39:  read_input:
40:          PutStr  query_number ; request number to be searched for
```

```
        GetInt  AX              ; read the number
        push    AX              ; push number, size & array pointer
        push    SI
        push    array
        call    binary_search
        ; binary_search returns in AX the position of the number
        ; in the array; if not found, it returns 0.
        cmp     AX,0            ; number found?
        je      not_found       ; if not, display number not found
        PutStr  out_msg         ; else, display number position
        PutInt  AX
        jmp     user_query
not_found:
        PutStr  not_found_msg
user_query:
        nwln
        PutStr  query_msg       ; query user whether to terminate
        GetCh   AL              ; read response
        cmp     AL,'Y'          ; if response is not 'Y'
        jne     read_input      ; repeat the loop
done:                           ; otherwise, terminate program
        .EXIT

;-----------------------------------------------------------
; This procedure receives a pointer to an array of integers,
; the array size, and a number to be searched via the stack.
; It returns in AX the position of the number in the array
; if found; otherwise, returns 0.
; All registers, except AX, are preserved.
;-----------------------------------------------------------
binary_search:
        enter   0,0
        push    EBX
        push    ESI
        push    CX
        push    DX
        mov     EBX,[EBP+8]     ; copy array pointer
        mov     CX,[EBP+12]     ; copy array size
        mov     DX,[EBP+14]     ; copy number to be searched
        xor     AX,AX           ; lower = 0
        dec     CX              ; upper = size-1
while_loop:
        cmp     AX,CX           ;lower > upper?
        ja      end_while
        sub     ESI,ESI
        mov     SI,AX           ; middle = (lower + upper)/2
        add     SI,CX
        shr     SI,1
        cmp     DX,[EBX+ESI*2]      ; number = array[middle]?
        je      search_done
        jg      upper_half
```

```
 92:  lower_half:
 93:          dec     SI              ; middle = middle-1
 94:          mov     CX,SI           ; upper = middle-1
 95:          jmp     while_loop
 96:  upper_half:
 97:          inc     SI              ; middle = middle+1
 98:          mov     AX,SI           ; lower = middle+1
 99:          jmp     while_loop
100:  end_while:
101:          sub     AX,AX           ; number not found (clear AX)
102:          jmp     skip1
103:  search_done:
104:          inc     SI              ; position = index+1
105:          mov     AX,SI           ; return position
106:  skip1:
107:          pop     DX              ; restore registers
108:          pop     CX
109:          pop     ESI
110:          pop     EBX
111:          leave
112:          ret     8
```

Since the binary search procedure returns a value in the AX register, we cannot use the `pusha` instruction as in the last example. On line 89, we use a scale factor of two to convert the index value in SI to byte count. Also, a single comparison (line 89) is sufficient to test multiple conditions (i.e., equal to, greater than, or less than). If the number is found in the array, the index value in SI is returned via AX (line 105).

Example 13.3 *Finding the sum of a column in a two-dimensional array.*
This example illustrates how two-dimensional arrays are manipuilated in the assembly language. This example also demonstrates the use of advanced addressing modes in accessing multidimensional arrays.

Consider the `class_marks` array representing the test scores of a class. For simplicity, assume that there are only five students in the class. Also, assume that the class is given three tests. As we have discussed before, we can use a 5 × 3 array to store the marks. Each row represents the three test marks of a student in the class. The first column represents the marks of the first test; the second column represents the marks of the second test, and so on. The objective of this example is to find the sum of the last test marks for the class. The program listing is given below.

Program 13.4 Finding the sum of a column in a two-dimensional array

```
1:  ;Sum of a column in a 2-dimensional array      TEST_SUM.ASM
2:  ;
3:  ;        Objective: To demonstrate array index manipulation
4:  ;                   in a two-dimensional array of integers.
5:  ;            Input: None.
6:  ;           Output: Displays the sum.
```

```
 7:  %include "io.mac"
 8:
 9:  .DATA
10:  NO_ROWS        EQU  5
11:  NO_COLUMNS     EQU  3
12:  NO_ROW_BYTES   EQU  NO_COLUMNS * 2  ; number of bytes per row
13:  class_marks    dw   90,89,99
14:                 dw   79,66,70
15:                 dw   70,60,77
16:                 dw   60,55,68
17:                 dw   51,59,57
18:
19:  sum_msg        db   "The sum of the last test marks is: ",0
20:
21:  .CODE
22:          .STARTUP
23:          mov     CX,NO_ROWS    ; loop iteration count
24:          sub     AX,AX         ; sum = 0
25:          ; ESI = index of class_marks[0,2]
26:          sub     EBX,EBX
27:          mov     ESI,NO_COLUMNS-1
28:  sum_loop:
29:          add     AX,[class_marks+EBX+ESI*2]
30:          add     EBX,NO_ROW_BYTES
31:          loop    sum_loop
32:
33:          PutStr  sum_msg
34:          PutInt  AX
35:          nwln
36:  done:
37:          .EXIT
```

To access individual test marks, we use based-indexed addressing with a displacement on line 29. Note that even though we have used

```
[class_marks+EBX+ESI*2]
```

it is translated by the assembler as

```
[EBX+(ESI*2)+constant]
```

where `constant` is the offset of `class_marks`. For this to work, the EBX should store the offset of the row in which we are interested. For this reason, after initializing the EBX to zero to point to the first row (line 29), `NO_ROW_BYTES` is added in the loop body (line 30). The ESI register is used as the column index. This works for row-major ordering.

Summary

The addressing mode refers to the specification of operands required by an assembly language instruction. We discussed several memory addressing modes supported by the IA-32 architecture.

We showed by means of examples how these addressing modes are useful in supporting features of high-level languages.

Arrays are useful for representing a collection of related data. In high-level languages, programmers do not have to worry about the underlying storage representation used to store arrays in the memory. However, when manipulating arrays in the assembly language, we need to know this information. This is so because accessing individual elements of an array involves computing the corresponding displacement value. Although there are two common ways of storing a multidimensional array—row-major or column-major order—most high-level languages, including C, use the row-major order. We presented examples to illustrate how one- and two-dimensional arrays are manipulated in the assembly language.

14

Arithmetic Instructions

We start this chapter with a detailed discussion of the six status flags—zero, carry, overflow, sign, parity, and auxiliary flags. We have already used these flags in our assembly language programs. The discussion here helps us understand how the processor executes some of the conditional jump instructions. The next section deals with multiplication and division instructions. The IA-32 instruction set includes multiplication and division instructions for both signed and unsigned integers. We then present several examples to illustrate the use of the instructions discussed in this chapter. The chapter concludes with a summary.

Introduction

We have discussed the flags register in Chapter 4. Six flags in this register are used to monitor the outcome of the arithmetic, logical, and related operations. By now you are familiar with the purpose of some of these flags. The six flags are the zero flag (ZF), carry flag (CF), overflow flag (OF), sign flag (SF), auxiliary flag (AF), and parity flag (PF). For obvious reasons, these six flags are called the *status* flags.

When an arithmetic operation is performed, some of the flags are updated (set or cleared) to indicate certain properties of the result of that operation. For example, if the result of an arithmetic operation is zero, the zero flag is set (i.e., ZF = 1). Once the flags are updated, we can use the conditional branch instructions to alter flow control. We have discussed several types of conditional jump instructions, including jump on less than or equal, greater than, and so on. However, we have not described how the jumps test for the condition. We discuss these details in this chapter.

The IA-32 instruction set provides several arithmetic instructions. We have already used some of these instructions (e.g., `add` and `sub`). The instruction set supports the four basic operations: addition, subtraction, multiplication, and division. The addition and subtraction operations do not require separate instructions for signed and unsigned numbers. In fact, we do not need even the subtract instructions as the subtract operation can be treated as adding a negative value.

Multiplication and division operations, however, need separate instructions. In addition, the format of these instructions is slightly different in the sense they typically specify only a single operand. The other operand is assumed to be in a designated register. Since we have covered the addition and subtraction instructions in Chapter 9, we will focus on the multiplication and division instructions in this chapter.

Status Flags

The six status flags are affected by most of the arithmetic instructions we discuss in this chapter. You should note that once a flag is set or cleared, it remains in that state until another instruction changes its value. Also note that not all assembly language instructions affect all the flags. Some instructions affect all six status flags, whereas other instructions affect none of the flags. And there are other instructions that affect only a subset of these flags. For example, the arithmetic instructions `add` and `sub` affect all six flags, but `inc` and `dec` instructions affect all but the carry flag. The `mov`, `push`, and `pop` instructions, on the other hand, do not affect any of the flags.

Here is an example illustrating how the zero flag changes with instruction execution.

```
;initially, assume that ZF is 0
mov     EAX,55H   ; ZF is still 0
sub     EAX,55H   ; result is zero
                  ; Thus, ZF is set (ZF = 1)
push    EBX       ; ZF remains 1
mov     EBX,EAX   ; ZF remains 1
pop     EDX       ; ZF remains 1
mov     ECX,0     ; ZF remains 1
inc     ECX       ; result is 1
                  ; Thus, ZF is cleared (ZF = 0)
```

As we show later, these flags can be tested either individually or in combination to affect the flow control of a program.

In understanding the workings of these status flags, you should know how signed and unsigned integers are represented. At this point, it is a good idea to review the material presented in Appendix A.

The Zero Flag

The purpose of the zero flag is to indicate whether the execution of the last instruction that affects the zero flag has produced a zero result. If the result was zero, ZF = 1; otherwise, ZF = 0. This is slightly confusing! You may want to take a moment to see through the confusion.

Although it is fairly intuitive to understand how the `sub` instruction affects the zero flag, it is not so obvious with other instructions. The following examples show some typical cases.

The code

```
mov     AL,0FH
add     AL,0F1H
```

sets the zero flag (i.e., ZF = 1). This is because, after executing the `add` instruction, the AL would contain zero (all eight bits zero). In a similar fashion, the code

```
mov     AX,0FFFFH
inc     AX
```

also sets the zero flag. The same is true for the following code:

```
mov     EAX,1
dec     EAX
```

Related Instructions The following two conditional jump instructions test this flag:

`jz` jump if zero (jump is taken if ZF = 1)
`jnz` jump if not zero (jump is taken if ZF = 0)

Usage There are two main uses for the zero flag: testing for equality, and counting to a preset value.

Testing for Equality: The `cmp` instruction is often used to do this. Recall that `cmp` performs subtraction. The main difference between `cmp` and `sub` is that `cmp` does not store the result of the subtract operation. The `cmp` instruction performs the subtract operation only to set the status flags. Here are some examples:

```
cmp     char,'$'        ; ZF = 1 if char is $
```

Similarly, two registers can be compared to see if they both have the same value.

```
cmp     EAX,EBX
```

Counting to a Preset Value: Another important use of the zero flag is shown below. Consider the following code:

```
sum = 0
for (i = 1 to M)
    for (j = 1 to N)
        sum = sum + 1
    end for
end for
```

The equivalent code in the assembly language is written as follows (assume that both M and N are ≥ 1):

```
        sub     EAX,EAX     ; EAX = 0 (EAX stores sum)
        mov     EDX,M
outer_loop:
        mov     ECX,N
inner_loop:
        inc     EAX
        loop    inner_loop
        dec     EDX
        jnz     outer_loop
exit_loops:
        mov     sum,EAX
```

In the above example, the inner loop count is placed in the ECX register so that we can use the `loop` instruction to iterate. Incidentally, the `loop` instruction does not affect any of the flags.

Since we have two nested loops to handle, we are forced to use another register to keep the outer loop count. We use the `dec` instruction and the zero flag to see if the outer loop has executed M times. This code is more efficient than initializing the EDX register to one and using the code

```
inc     EDX
cmp     EDX,M
jle     outer_loop
```

in place of the `dec`/`jnz` instruction combination.

The Carry Flag

The carry flag records the fact that the result of an arithmetic operation on unsigned numbers is out of range (too big or too small) to fit the destination register or memory location. Consider the example

```
mov     AL,0FH
add     AL,0F1H
```

The addition of 0FH and F1H would produce a result of 100H that requires 9 bits to store, as shown below.

```
  00001111B   (0FH = 15D)
  11110001B   (F1H = 241D)
1 00000000B   (100H = 256D)
```

Since the destination register AL is only 8 bits long, the carry flag would be set to indicate that the result is too big to be held in AL.

To understand when the carry flag would be set, it is helpful to remember the range of unsigned numbers that can be represented. The range is given below for easy reference.

Size (bits)	Range
8	0 to 255
16	0 to 65,535
32	0 to 4,294,967,295

Any operation that produces a result that is outside this range sets the carry flag to indicate an underflow or overflow condition. It is obvious that any negative result is out of range, as illustrated by the following example:

```
mov     EAX,12AEH     ;EAX = 4782D
sub     EAX,12AFH     ;EAX = 4782D - 4783D
```

Executing the above code will set the carry flag because 12AFH – 12AFH produces a negative result (i.e., the subtract operation generates a borrow), which is too small to be represented using unsigned numbers. Thus, the carry flag is set to indicate this underflow condition.

Executing the code

```
mov     AL,0FFH
inc     AL
```

or the code

```
mov     EAX,0
dec     EAX
```

does not set the carry flag as we might expect because `inc` and `dec` instructions do not affect the carry flag.

Related Instructions The following two conditional jump instructions test this flag:

`jc` jump if carry (jump is taken if CF = 1)
`jnc` jump if not carry (jump is taken if CF = 0)

Usage The carry flag is useful in several situations:

- To propagate carry or borrow in multiword addition or subtraction operations.
- To detect overflow/underflow conditions.
- To test a bit using the shift/rotate family of instructions.

To Propagate Carry/Borrow: The assembly language arithmetic instructions can operate on 8-, 16-, or 32-bit data. If two operands, each more than 32 bits, are to be added, the addition has to proceed in steps by adding two 32-bit numbers at a time. The following example illustrates how we can add two 64-bit unsigned numbers. For convenience, we use the hex representation.

```
                1  ← carry from lower 32 bits
x  =  3710 26A8 1257 9AE7H
y  =  489B A321 FE60 4213H
      ----------------------
      7FAB C9CA 10B7 DCFAH
```

To accomplish this, we need two addition operations. The first operation adds the least significant (lower half) 32 bits of the two operands. This produces the lower half of the result. This addition operation could produce a carry that should be added to the upper 32 bits of the input. The other add operation performs the addition of the most significant (upper half) 32 bits and any carry generated by the first addition. This operation produces the upper half of the 64-bit result.

As an example consider adding two 64-bit numbers in the registers EBX:EAX and EDX:ECX with EAX and ECX holding the lower 32-bit values of the two numbers. Then we can use the following code to add these two values:

```
add     EAX,ECX
adc     EBX,EDX
```

It leaves the 64-bit result in the EBX:EAX register pair. Notice that we use `adc` to do the second addition as we want to add any carry generated by the first addition. An overflow occurs if there is a carry out of the second addition, which sets the carry flag.

We can extend this process to larger numbers. For example, adding two 128-bit numbers involves a four-step process, where each step adds two 32-bit words. The first addition can be done using `add` but the remaining three additions must be done with the `adc` instruction. Similarly, the `sub` and other operations also require multiple steps when the numbers require more than 32 bits.

To Detect Overflow/Underflow Conditions: In the previous example, if the second addition produces a carry, the result is too big to be held by 64 bits. In this case, the carry flag would be set to indicate the overflow condition. It is up to the programmer to handle such error conditions.

Testing a Bit: When using shift and rotate instructions (introduced in Chapter 9), the bit that has been shifted or rotated out is captured in the carry flag. This bit can be either the most significant bit (in the case of a left-shift or rotate), or the least significant bit (in the case of a right-shift or rotate). Once the bit is in the carry flag, conditional execution of the code is possible using conditional jump instructions that test the carry flag: `jc` (jump on carry) and `jnc` (jump if no carry).

Why inc and dec Do Not Affect the Carry Flag We have stated that the `inc` and `dec` instructions do not affect the carry flag. The rationale for this is twofold:

1. The instructions `inc` and `dec` are typically used to maintain iteration or loop count. Using 32 bits, the number of iterations can be as high as 4,294,967,295. This number is sufficiently large for most applications. What if we need a count that is greater than this? Do we have to use `add` instead of `inc`? This leads to the second, and the main, reason.
2. The condition detected by the carry flag can also be detected by the zero flag. Why? Because `inc` and `dec` change the number only by 1. For example, suppose that the ECX register has reached its maximum value 4,294,967,295 (FFFFFFFFH). If we then execute

   ```
   inc     ECX
   ```

   we would normally expect the carry flag to be set to 1. However, we can detect this condition by noting that ECX = 0, which sets the zero flag. Thus, setting the carry flag is really redundant for these instructions.

The Overflow Flag

The overflow flag, in some respects, is the carry flag counterpart for the signed number arithmetic. The main purpose of the overflow flag is to indicate whether an operation on signed numbers has produced a result that is out of range. It is helpful to recall the range of signed numbers that can be represented using 8, 16, and 32 bits. For your convenience, this range is given below:

Size (bits)	Range
8	−128 to +127
16	−32,768 to +32,767
32	−2,147,483,648 to +2,147,483,647

Executing the code

```
mov     AL,72H   ; 72H = 114D
add     AL,0EH   ; 0EH = 14D
```

will set the overflow flag to indicate that the result 80H (128D) is too big to be represented as an 8-bit signed number. The AL register will contain 80H, the correct result if the two 8-bit operands are treated as unsigned numbers. But AL contains an incorrect answer for 8-bit signed numbers (80H represents −128 in signed representation, not +128 as required).

Here is another example that uses the `sub` instruction. The AX register is initialized to −5, which is FFFBH in 2's complement representation using 16 bits.

```
mov     AX,0FFFBH    ; AX = -5
sub     AX,7FFDH     ; subtract 32,765 from AX
```

Execution of the above code will set the overflow flag as the result

$$(-5)-(32{,}765) = -32{,}770$$

which is too small to be represented as a 16-bit signed number.

Note that the result will not be out of range (and hence the overflow flag will not be set) when we are adding two signed numbers of opposite sign or subtracting two numbers of the same sign.

Signed or Unsigned: How Does the System Know? The values of the carry and overflow flags depend on whether the operands are unsigned or signed numbers. Given that a bit pattern can be treated both as representing a signed and an unsigned number, a question that naturally arises is: How does the system know how your program is interpreting a given bit pattern? The answer is that the processor does not have a clue. It is up to our program logic to interpret a given bit pattern correctly. The processor, however, assumes both interpretations and sets the carry and overflow flags. For example, when executing

```
mov     AL,72H
add     AL,0EH
```

the processor treats 72H and 0EH as unsigned numbers. And since the result 80H (128) is within the range of 8-bit unsigned numbers (0 to 255), the carry flag is cleared (i.e., CF = 0). At the same time, 72H and 0EH are also treated as representing signed numbers. Since the result 80H (128) is outside the range of 8-bit signed numbers (−128 to +127), the overflow flag is set.

Thus, after executing the above two lines of code, CF = 0 and OF = 1. It is up to our program logic to take whichever flag is appropriate. If you are indeed representing unsigned numbers, disregard the overflow flag. Since the carry flag indicates a valid result, no exception handling is needed.

```
        mov     AL,72H
        add     AL,0EH
        jc      overflow
no_overflow:
        (no overflow code here)
                . . .
overflow:
        (overflow code here)
                . . .
```

If, on the other hand, 72H and 0EH are representing 8-bit signed numbers, we can disregard the carry flag value. Since the overflow flag is 1, our program will have to handle the overflow condition.

```
        mov     AL,72H
        add     AL,0EH
        jo      overflow
no_overflow:
        (no overflow code here)
                . . .
overflow:
        (overflow code here)
                . . .
```

Related Instructions The following two conditional jump instructions test this flag:

`jo` jump on overflow (jump is taken if OF = 1)
`jno` jump on no overflow (jump is taken if OF = 0)

In addition, a special software interrupt instruction

`into` interrupt on overflow

is provided to test the overflow flag. Interrupts are discussed in Chapter 20.

Usage The main purpose of the overflow flag is to indicate whether an arithmetic operation on signed numbers has produced an out-of-range result. The overflow flag is also affected by shift, multiply, and divide operations. More details on some of these instructions can be found in later sections of this chapter.

The Sign Flag

As the name implies, the sign flag indicates the sign of the result of an operation. Therefore, it is useful only when dealing with signed numbers. Recall that the most significant bit is used to represent the sign of a number: 0 for positive numbers and 1 for negative numbers. The sign flag gets a copy of the sign bit of the result produced by arithmetic and related operations. The following sequence of instructions

```
mov     EAX,15
add     EAX,97
```

will clear the sign flag (i.e., SF = 0) because the result produced by the `add` instruction is a positive number: 112D (which is 01110000 in binary).

The result produced by

```
mov     EAX,15
sub     EAX,97
```

is a negative number and sets the sign flag to indicate this fact. Remember that negative numbers are represented in 2s complement notation (see Appendix A). As discussed in Appendix A, the subtract operation can be treated as the addition of the corresponding negative number. Thus, 15 − 97 is treated as 15 + (−97), where, as usual, −97 is expressed in 2s complement form. Therefore, after executing the above two instructions, the EAX register contains AEH, as shown below:

```
  00001111B     (8-bit signed form of 15)
+ 10011111B     (8-bit signed number for −97)
  --------
  10101110B
```

Since the sign bit of the result is 1, the result is negative and is in 2s complement form. You can easily verify that AEH is the 8-bit signed form of −82, which is the correct answer.

Related Instructions The following two conditional jump instructions test this flag:

`js` jump on sign (jump is taken if SF = 1)
`jns` jump on no sign (jump is taken if SF = 0)

The `js` instruction causes the jump if the last instruction that updated the sign flag produced a negative result. The `jns` instruction causes the jump if the result was nonnegative.

Usage The main use of the sign flag is to test the sign of the result produced by arithmetic and related instructions. Another use for the sign flag is in implementing counting loops that should iterate until (and including) the control variable is zero. For example, consider the following code:

for (i = M downto 0)
    <loop body>
end for

This loop can be implemented without using a `cmp` instruction as follows:

```
        mov     ECX,M
for_loop:
            . . .
        <loop body>
            . . .
        dec     ECX
        jns     for_loop
```

If we do not use the `jns` instruction, we have to use

```
        cmp     ECX,0
        jl      for_loop
```

in its place.

From the user point of view, the sign bit of a number can be easily tested by using a logical or shift instruction. Compared to the other three flags we have discussed so far, the sign flag is used relatively infrequently in user programs. However, the processor uses the sign flag when executing conditional jump instructions on signed numbers (details are in Chapter 15 on page 322).

The Auxiliary Flag

The auxiliary flag indicates whether an operation has produced a result that has generated a carry out of or a borrow into the low-order four bits of 8-, 16-, or 32-bit operands. In computer jargon, four bits are referred to as a nibble. The auxiliary flag is set if there is such a carry or borrow; otherwise it is cleared.

In the example

```
mov     AL,43
add     AL,94
```

the auxiliary flag is set because there is a carry out of bit 3, as shown below:

```
                1 ← carry generated from lower to upper nibble
 43D  = 00101011B
 94D  = 01011110B
 137D = 10001001B
```

You can verify that executing the following code clears the auxiliary flag:

```
mov     AL,43
add     AL,84
```

Since the following instruction sequence

```
mov     AL,43
sub     AL,92
```

generates a borrow into the low-order 4 bits, the auxiliary flag is set. On the other hand, the instruction sequence

```
mov     AL,43
sub     AL,87
```

clears the auxiliary flag.

Related Instructions and Usage There are no conditional jump instructions that test the auxiliary flag. However, arithmetic operations on numbers expressed in decimal form or binary coded decimal (BCD) form use the auxiliary flag. Some related instructions are as follows:

`aaa`	ASCII adjust for addition
`aas`	ASCII adjust for subtraction
`aam`	ASCII adjust for multiplication
`aad`	ASCII adjust for division
`daa`	Decimal adjust for addition
`das`	Decimal adjust for subtraction

For details on these instructions and BCD numbers, see Chapter 18.

The Parity Flag

This flag indicates the parity of the 8-bit result produced by an operation; if this result is 16 or 32 bits long, only the lower-order 8 bits are considered to set or clear the parity flag. The parity flag is set if the byte contains an even number of 1 bits; if there are an odd number of 1 bits, it is cleared. In other words, the parity flag indicates an even parity condition of the byte.

Thus, executing the code

```
mov     AL,53
add     AL,89
```

will set the parity flag because the result contains an even number of 1s (four 1 bits), as shown below:

```
 53D = 00110101B
 89D = 01011001B
-----------------
142D = 10001110B
```

The instruction sequence

```
mov     AX,23994
sub     AX,9182
```

on the other hand, clears the parity flag, as the low-order 8 bits contain an odd number of 1s (five 1 bits), as shown below:

```
    23994D = 01011101 10111010B
+   -9182D = 11011100 00100010B
    -------------------------
    14813D = 00111001 11011100B
```

Related Instructions The following two conditional jump instructions test this flag:

`jp`	jump on parity (jump is taken if PF = 1)
`jnp`	jump on no parity (jump is taken if PF = 0)

The `jp` instruction causes the jump if the last instruction that updated the parity flag produced an even parity byte; the `jnp` instruction causes the jump for an odd parity byte.

Usage This flag is useful for writing data encoding programs. As a simple example, consider transmission of data via modems using the 7-bit ASCII code. To detect simple errors during data transmission, a single parity bit is added to the 7-bit data. Assume that we are using even parity encoding. That is, every 8-bit character code transmitted will contain an even number of 1 bits. Then, the receiver can count the number of 1s in each received byte and flag transmission error if the byte contains an odd number of 1 bits. Such a simple encoding scheme can detect single bit errors (in fact, it can detect an odd number of single bit errors).

To encode, the parity bit is set or cleared depending on whether the remaining 7 bits contain an odd or even number of 1s, respectively. For example, if we are transmitting character A, whose 7-bit ASCII representation is 41H, we set the parity bit to 0 so that there is an even number of 1s. In the following examples, the parity bit is the leftmost bit:

```
A = 01000001
```

For character C, the parity bit is set because its 7-bit ASCII code is 43H.

```
C = 11000011
```

Here is a procedure that encodes the 7-bit ASCII character code present in the AL register. The most significant bit (i.e., leftmost bit) is assumed to be zero.

```
parity_encode PROC
      shl     AL
      jp      parity_zero
      stc             ; CF = 1
      jmp     move_parity_bit
parity_zero:
      clc             ; CF = 0
move_parity_bit:
      rcr     AL
parity_encode ENDP
```

Flag Examples

Here we present two examples to illustrate how the status flags are affected by the arithmetic instructions. You can verify the answers by using a debugger (see Chapter 8 for information on debuggers).

Example 14.1 *Add/subtract example.*
Table 14.1 gives some examples of `add` and `sub` instructions and how they affect the flags. Updating of ZF, SF, and PF is easy to understand. The ZF is set whenever the result is zero; SF is simply a copy of the most significant bit of the result; and PF is set whenever there are an even number of 1s in the result. In the rest of this example, we focus on the carry and overflow flags.

Example 1 performs −5−123. Note that −5 is represented internally as FBH, which is treated as 251 in unsigned representation. Subtracting 123 (=7BH) leaves 80H (=128) in AL. Since the result is within the range of unsigned 8-bit numbers, CF is cleared. For the overflow flag, the operands are interpreted as signed numbers. Since the result is −128, OF is also cleared.

Example 2 subtracts 124 from −5. For reasons discussed in the previous example, the CF is cleared. The OF, however, is set because the result is −129, which is outside the range of signed 8-bit numbers.

Table 14.1 Examples illustrating the effect on flags

	Code		AL	CF	ZF	SF	OF	PF
Example 1	mov	AL,-5						
	sub	AL,123	80H	0	0	1	0	0
Example 2	mov	AL,-5						
	sub	AL,124	7FH	0	0	0	1	0
Example 3	mov	AL,-5						
	add	AL,132	7FH	1	0	0	1	0
	add	AL,1	80H	0	0	1	1	0
Example 4	sub	AL,AL	00H	0	1	0	0	1
Example 5	mov	AL,127						
	add	AL,129	00H	1	1	0	0	1

In Example 3, the first `add` statement adds 132 to −5. However, when treating them as unsigned numbers, 132 is actually added to 251, which results in a number that is greater than 255D. Therefore, CF is set. When treating them as signed numbers, 132 is internally represented as 84H (=−124). Therefore, the result −129 is smaller than −128. Therefore, the OF is also set. After executing the first `add` instruction, AL will have 7FH. The second `add` instruction increments 7FH. This sets the OF, but not CF.

Example 4 causes the result to be zero irrespective of the contents of the AL register. This sets the zero flag. Also, since the number of 1s is even, PF is also set in this example.

The last example adds 127D to 129D. Treating them as unsigned numbers, the result 256D is just outside the range, and sets CF. However, if we treat them as representing signed numbers, 129D is stored internally as 81H (=−127). The result, therefore, is zero and the OF is cleared.

Example 14.2 *A compare example.*
This example shows how the status flags are affected by the compare instruction discussed in Chapter 9 on page 199. Table 14.2 gives some examples of executing the

```
cmp     AL,DL
```

instruction. We leave it as an exercise to verify (without using a debugger) the flag values.

Arithmetic Instructions

For the sake of completeness, we list the arithmetic instructions supported by the IA-32 instruction set:

Addition: `add, adc, inc`
Subtraction: `sub, sbb, dec, neg, cmp`
Multiplication: `mul, imul`
Division: `div, idiv`
Related instructions: `cbw, cwd, cdq, cwde, movsx, movzx`

Table 14.2 Some examples of `cmp AL,DL`

AL	DL	CF	ZF	SF	OF	PF	AF
56	57	1	0	1	0	1	1
200	101	0	0	0	1	1	0
101	200	1	0	1	1	0	1
200	200	0	1	0	0	1	0
−105	−105	0	1	0	0	1	0
−125	−124	1	0	1	0	1	1
−124	−125	0	0	0	0	0	0

We have already looked at the addition and subtraction instructions in Chapter 9. Here we discuss the remaining instructions. There are a few other arithmetic instructions that operate on decimal and BCD numbers. Details of these instructions can be found in Chapter 18.

Multiplication Instructions

Multiplication is more complicated than the addition and subtraction operations for two reasons:

1. First, multiplication produces double-length results. That is, multiplying two n-bit values produces a $2n$-bit result. To see that this is indeed the case, consider multiplying two 8-bit numbers. Assuming unsigned representation, `FFH` (255D) is the maximum number that the source operands can take. Thus, the multiplication produces the maximum result, as shown below:

$$\underset{(255D)}{11111111} \times \underset{(255D)}{11111111} = \underset{(65025D)}{11111110\,11111111}.$$

   Similarly, multiplication of two 16-bit numbers requires 32 bits to store the result, and two 32-bit numbers require 64 bits for the result.
2. Second, unlike the addition and subtraction operations, multiplication of signed numbers should be treated differently from that of unsigned numbers. This is because the resulting bit pattern depends on the type of input, as illustrated by the following example:

   We have just seen that treating `FFH` as the unsigned number results in multiplying 255D × 255D.

$$11111111 \times 11111111 = 11111110\,11111111.$$

   Now, what if `FFH` is representing a signed number? In this case, `FFH` is representing −1D and the result should be 1, as shown below:

$$11111111 \times 11111111 = 00000000\,00000001.$$

As you can see, the resulting bit patterns are different for the two cases.

Thus, the instruction set provides two multiplication instructions: one for unsigned numbers and the other for signed numbers. We first discuss the unsigned multiplication instruction, which has the format

```
mul     source
```

The `source` operand can be in a general-purpose register or in memory. Immediate operand specification is not allowed. Thus,

```
mul     10          ; invalid
```

is an invalid instruction. The `mul` instruction works on 8-, 16-, and 32-bit unsigned numbers. But, where is the second operand? The instruction assumes that it is in the accumulator. If the source operand is a byte, it is multiplied by the contents of the AL register. The 16-bit result is placed in the AX register, as shown below:

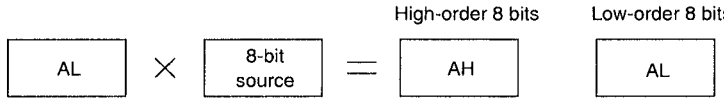

If the source operand is a word, it is multiplied by the contents of the AX register and the doubleword result is placed in DX:AX, with the AX register holding the lower-order 16 bits, as shown below:

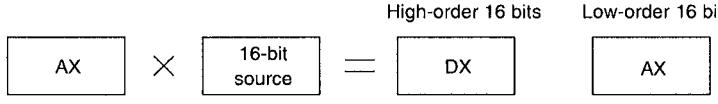

If the source operand is a doubleword, it is multiplied by the contents of the EAX register and the 64-bit result is placed in EDX:EAX, with the EAX register holding the lower-order 32 bits, as shown below:

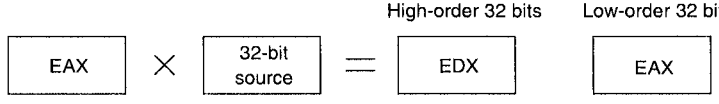

The `mul` instruction affects all six status flags. However, it updates only the carry and overflow flags. The remaining four flags are undefined. The carry and overflow flags are set if the upper half of the result is nonzero; otherwise, they are both cleared.

Setting of the carry and overflow flags does not indicate an error condition. Instead, this condition implies that AH, DX, or EDX contains significant digits of the result.

For example, the code

```
mov     AL,10
mov     DL,25
mul     DL
```

clears both the carry and overflow flags, as the result of the `mul` instruction is 250, which can be stored in the AL register (and the AH register contains `00000000`). On the other hand, executing

```
mov     AL,10
mov     DL,26
mul     DL
```

sets the carry and overflow flags indicating that the result is more than 255.

For signed numbers, we have to use the `imul` (integer multiplication) instruction, which has the same format[1] as the `mul` instruction

```
imul    source
```

The behavior of the `imul` instruction is similar to that of the `mul` instruction. The only difference to note is that the carry and overflow flags are set if the upper half of the result is not the sign extension of the lower half. To understand sign extension in signed numbers, consider the following example. We know that −66 is represented using 8 bits as

10111110.

Now, suppose that we can use 16 bits to represent the same number. Using 16 bits, −66 is represented as

1111111110111110.

The upper 8 bits are simply sign-extended (i.e., the sign bit is copied into these bits), and doing so does not change the magnitude.

Following the same logic, the positive number 66, represented using 8 bits as

01000010

can be sign-extended to 16 bits by adding eight leading zeros as shown below:

0000000001000010.

As with the `mul` instruction, setting of the carry and overflow flags does not indicate an error condition; it simply indicates that the result requires double length.

Here are some examples of the `imul` instruction. Execution of the following code

```
mov     DL,0FFH     ; DL = -1
mov     AL,42H      ; AL = 66
imul    DL
```

causes the result

1111111110111110

to be placed in the AX register. The carry and overflow flags are cleared, as AH contains the sign extension of the AL value. This is also the case for the following code:

```
mov     DL,0FFH     ; DL = -1
mov     AL,0BEH     ; AL = -66
imul    DL
```

[1] The `imul` instruction supports several other formats, including specification of an immediate value. We do not discuss these details; see Intel's *IA-32 Architecture Software Developer's Manual.*

which produces the result

0000000001000010 (+66)

in the AX register. Again, both the carry and overflow flags are cleared.

In contrast, both flags are set for the following code:

```
mov     DL,25    ; DL = 25
mov     AL,0F6H  ; AL = -10
imul    DL
```

which produces the result

1111111100000110 (−250).

A Note on Multiplication The multiplication instruction is an expensive one in the sense it takes more time than the other arithmetic instructions like `add` and `sub`. (Of course, the division instructions take even more time.) Thus, for some multiplications, we get better performance by not using the multiplication instructions. For example, to multiply the value in EAX by 2, we do better by using

```
add     EAX,EAX
```

The `add` instruction takes only one clock cycle whereas the multiplication instruction takes 10+ clock cycles.

As another example, consider multiplication by 10, which is often needed in number conversion routines. We can do this multiplication by using a sequence of additions more efficiently than the multiplication instruction. For example, if we want to multiply `y` (in EAX) by 10, we can use the following code:

```
add     EAX,EAX     ; EAX = 2y
mov     EBX,EAX     ; EBX = 2y
add     EAX,EAX     ; EAX = 4y
add     EAX,EAX     ; EAX = 8y
add     EAX,EBX     ; EAX = 10y
```

Since the `mov` and `add` instructions take only one clock cycle, this sequence takes only 5 clocks compared to 10+ clocks for the multiplication instruction. We can do even better by using a mix of shift and add instructions. If we want to multiply a number by a power of 2, it is better to use the shift instructions (see our discussion in Chapter 16 on page 351).

Division Instructions

The division operation is even more complicated than multiplication for two reasons:

1. Division generates two result components: a quotient and a remainder.
2. In multiplication, by using double-length registers, overflow never occurs. In division, divide overflow is a real possibility. The processor generates a special software interrupt when a divide overflow occurs.

As with the multiplication instruction, two versions of the divide instruction are provided to work on unsigned and signed numbers.

```
div     source  (unsigned)
idiv    source  (signed)
```

The source operand specified in the instruction is used as the divisor. As with the multiplication instruction, both division instructions can work on 8-, 16-, or 32-bit numbers. All six status flags are affected and are *undefined*. None of the flags are updated. We first consider the unsigned version.

If the source operand is a byte, the dividend is assumed to be in the AX register and 16 bits long. After the division, the quotient is returned in the AL register and the remainder in the AH register, as shown below:

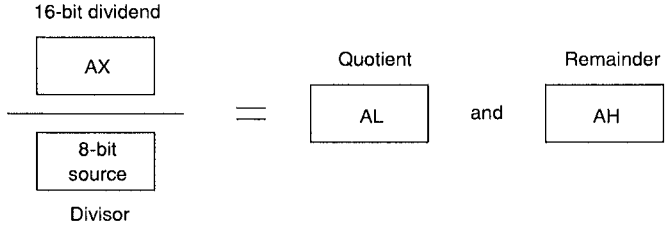

For word operands, the dividend is assumed to be 32 bits long and in DX:AX (upper 16 bits in DX). After the division, the 16-bit quotient will be in AX and the 16-bit remainder in DX, as shown below:

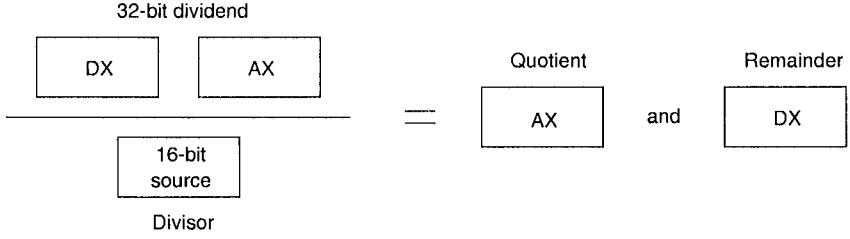

For 32-bit operands, the dividend is assumed to be 64 bits long and in EDX:EAX. After the division, the 32-bit quotient will be in the EAX and the 32-bit remainder in the EDX, as shown below:

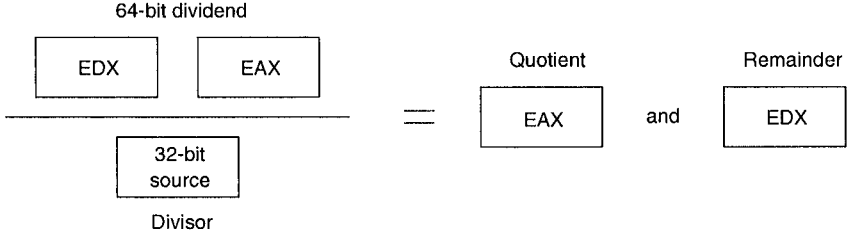

Example 14.3 *8-bit division.*
Consider dividing 251 by 12 (i.e., 251/12), which produces 20 as the quotient and 11 as the remainder. The code

```
mov     AX,251
mov     CL,12
div     CL
```

leaves 20 (14H) in the AL register and 11 (0BH) in the AH register. □

Example 14.4 *16-bit division.*
Consider the 16-bit division: 5147/300. Executing the code

```
xor     DX,DX       ; clear DX
mov     AX,141BH    ; AX = 5147D
mov     CX,012CH    ; CX = 300D
div     CX
```

leaves 17 (12H) in the AX and 47 (2FH) in the DX. □

Now let us turn our attention to the signed division operation. The `idiv` instruction has the same format and behavior as the unsigned `div` instruction including the registers used for the dividend, quotient, and remainder.

The `idiv` instruction introduces a slight complication when the dividend is a negative number. For example, assume that we want to perform the 16-bit division: −251/12. Since −251 = FF14H, the AX register is set to FF14H. However, the DX register has to be initialized to FFFFH by sign-extending the AX register. If the DX is set to 0000H as we did in the unsigned `div` operation, the dividend 0000FF14H is treated as a positive number 65300D. The 32-bit equivalent of −251 is FFFFFF14H. If the dividend is positive, DX should have 0000H.

To aid sign extension in instructions such as `idiv`, the instruction set provides several instructions:

`cbw`	(convert byte to word)
`cwd`	(convert word to doubleword)
`cdq`	(convert doubleword to quadword)

These instructions take no operands. The first instruction can be used to sign-extend the AL register into the AH register and is useful with the 8-bit `idiv` instruction. The `cwd` instruction sign extends the AX into the DX register and is useful with the 16-bit `idiv` instruction. The `cdq` instruction sign extends the EAX into the EDX. In fact, both `cwd` and `cdq` use the same opcode 99H, and the operand size determines whether to sign-extend the AX or EAX register.

For completeness, we mention three other related instructions. The `cwde` instruction sign extends the AX into EAX much as the `cbw` instruction. Just like the `cwd` and `cdq`, the same opcode 98H is used for both `cbw` and `cwde` instructions. The operand size determines which one should be applied. Note that `cwde` is different from `cwd` in that the `cwd` instruction uses the DX:AX register pair, whereas `cwde` uses the EAX register as the destination.

The instruction set also provides the following two move instructions:

`movsx`	`dest,src`	(move sign-extended `src` to `dest`)
`movzx`	`dest,src`	(move zero-extended `src` to `dest`)

In both these instructions, `dest` has to be a register, whereas the `src` operand can be in a register or memory. If the source is an 8-bit operand, the destination has to be either a 16- or 32-bit register. If the source is a 16-bit operand, the destination must be a 32-bit register.

Here are some examples of the `idiv` instruction.

Example 14.5 *Signed 8-bit division.*
The following sequence of instructions perform the signed 8-bit division −95/12:

```
mov     AL,-95
cbw                     ; AH = FFH
mov     CL,12
idiv    CL
```

The `idiv` instruction leaves −7 (F9H) in the AL register and −11 (F5H) in the AH register. □

Example 14.6 *Signed 16-bit division.*
Suppose that we want to divide −5147 by 300. The instruction sequence

```
mov     AX,-5147
cwd                     ; DX = FFFFH
mov     CX,300
idiv    CX
```

performs this division and leaves −17 (FFEFH) in the AX register and −47 (FFD1H) in the DX register as the remainder. □

Our First Program

In the previous chapters, we looked at how the add and subtract instructions are used in assembly language programs. Since we introduced the multiplication instructions in this chapter, we look at how they are used in assembly language programs. Program 14.1 is a simple to program to multiply two 32-bit integers and display the result.

Program 14.1 Multiplication program to multiply two 32-bit signed integers

```
 1:  ;Multiplies two 32-bit signed integerts     MULT.ASM
 2:  ;
 3:  ;        Objective: To use the multiply instruction.
 4:  ;            Input: Requests two integers N and M.
 5:  ;           Output: Outputs N*M if no overflow.
 6:  %include "io.mac"
 7:
 8:  .DATA
 9:  prompt_msg  db   "Enter two integers: ",0
10:  output_msg  db   "The product = ",0
11:  oflow_msg   db   "Sorry! Result out of range.",0
12:  query_msg   db   "Do you want to quit (Y/N): ",0
13:
14:  .CODE
15:        .STARTUP
```

```
16:  read_input:
17:        PutStr  prompt_msg
18:        GetLInt EAX
19:        GetLInt EBX
20:        imul    EBX             ; signed multiply
21:        jc      overflow
22:        PutStr  output_msg      ; no overflow
23:        PutLInt EAX             ; display result
24:        nwln
25:        jmp     short user_query
26:  overflow:
27:        PutStr  oflow_msg
28:        nwln
29:  user_query:
30:        ; query user whether to terminate
31:        PutStr  query_msg
32:        GetCh   AL
33:        cmp     AL,'Y'          ; if response is not 'Y'
34:        jne     read_input      ; repeat the loop
35:  done:
36:        .EXIT
```

An example interaction with the program is shown below:

```
Enter two integers: 65535
32768
The product = 2147450880
Do you want to quit (Y/N): n
Enter two integers: 65535
32769
Sorry! Result out of range.
Do you want to quit (Y/N): Y
```

If there is no overflow, the result is displayed; otherwise, an error message is displayed. In both cases, the user is queried if the program is to be continued.

The two input numbers are read into the EAX and EBX registers using `GetLInt` on lines 18 and 19. Since the two values are signed integers, we use `imul` to multiply these two integers. Recall that the multiply instructions set the carry flag if the result requires more than 32 bits. While this condition is technically not an error, for practical purposes we treat this as an overflow. We use the conditional jump instruction on line 21 to detect this overflow condition. If there is no overflow, we display the 32-bit result (line 23). The rest of the program is straightforward to follow.

Illustrative Examples

To demonstrate the application of the arithmetic instructions and flags, we write two procedures to input and output signed 8-bit integers in the range of −128 to +127. These procedures are as follows:

`PutInt8` Displays a signed 8-bit integer that is in the AL register;
`GetInt8` Reads a signed 8-bit integer from the keyboard into the AL register.

The following two subsections describe these procedures in detail.

Example 14.7 *PutInt8 procedure.*
Our objective here is to write a procedure that displays the signed 8-bit integer that is in the AL register. In order to do this, we have to separate individual digits of the number to be displayed and convert them to their ASCII representation. The steps involved are illustrated by the following example, which assumes that AL has 108.

separate 1 → convert to ASCII (31H) → display
separate 0 → convert to ASCII (30H) → display
separate 8 → convert to ASCII (38H) → display

Separating individual digits is the heart of the procedure. This step is surprisingly simple! All we have to do is repeatedly divide the number by 10, as shown below (for a related discussion, see Appendix A):

		Quotient	Remainder
108/10	=	10	8
10/10	=	1	0
1/10	=	0	1

The only problem with this step is that the digits come out in the reverse order. Therefore, we need to buffer them before displaying. The pseudocode for the `PutInt8` procedure is shown below:

```
PutInt8 (number)
    if (number is negative)
    then
        display '–' sign
        number = –number {reverse sign}
    end if
    index = 0
    repeat
        quotient = number/10 {integer division}
        remainder = number % 10 {% is the modulo operator}
        buffer[index] = remainder + 30H
        {save the ASCII character equivalent of remainder}
        index = index + 1
        number = quotient
    until (number = 0)
    repeat
        index = index – 1
        display digit at buffer[index]
    until (index = 0)
end PutInt8
```

Program 14.2 The `PutInt8` procedure to display an 8-bit signed number (in `getput.asm` file)

```
 1:  ;-----------------------------------------------------------
 2:  ;PutInt8 procedure displays a signed 8-bit integer that is
 3:  ;in the AL register. All registers are preserved.
 4:  ;-----------------------------------------------------------
 5:  PutInt8:
 6:        enter   3,0          ; reserves 3 bytes of buffer space
 7:        push    AX
 8:        push    BX
 9:        push    ESI
10:        test    AL,80H       ; negative number?
11:        jz      positive
12:  negative:
13:        PutCh   '-'          ; sign for negative numbers
14:        neg     AL           ; convert to magnitude
15:  positive:
16:        mov     BL,10        ; divisor  = 10
17:        sub     ESI,ESI      ; ESI = 0 (ESI points to buffer)
18:  repeat1:
19:        sub     AH,AH        ; AH = 0 (AX is the dividend)
20:        div     BL
21:        ; AX/BL leaves AL = quotient & AH = remainder
22:        add     AH,'0'       ; convert remainder to ASCII
23:        mov     [EBP+ESI-3],AH ; copy into the buffer
24:        inc     ESI
25:        cmp     AL,0         ; quotient = zero?
26:        jne     repeat1      ; if so, display the number
27:  display_digit:
28:        dec     ESI
29:        mov     AL,[EBP+ESI-3]; display digit pointed by ESI
30:        PutCh   AL
31:        jnz     display_digit ; if ESI<0, done displaying
32:  display_done:
33:        pop     ESI           ; restore registers
34:        pop     BX
35:        pop     AX
36:        leave                 ; clears local buffer space
37:        ret
```

The `PutInt8` procedure shown in Program 14.2 follows the logic of the pseudocode. Some points to note are the following:

- The buffer is considered as a local variable. Thus, we reserve three bytes on the stack using the `enter` instruction (see line 6).
- The code

```
test    AL,80H
jz      positive
```

tests whether the number is negative or positive. Remember that the sign bit (the leftmost bit) is 1 for a negative number.

- Reversal of sign is done by the

```
neg     AL
```

instruction on line 14.

- Note that we have to initialize AH with 0 (line 19), as the `div` instruction assumes a 16-bit dividend in the AX register when the divisor is an 8-bit number.
- Conversion to ASCII character representation is done on line 22 using

```
add     AH,'0'
```

- The ESI register is used as the index into the buffer, which starts at [BP − 3]. Thus, [BP + ESI − 3] points to the current byte in the buffer (line 29).
- The repeat- while condition (index = 0) is tested by

```
jnz     display_digit
```

on line 31.

Example 14.8 *GetInt8 procedure.*
The `GetInt8` procedure reads a signed integer and returns the number in the AL register. Since only 8 bits are used to represent the number, the range is limited to −128 to +127 (both inclusive). The key part of the procedure converts a sequence of input digits received in the character form to its binary equivalent. The conversion process, which involves repeated multiplication by 10, is illustrated for the number 158:

Input digit	Numeric value	Number = number * 10 + numeric value
Initial value	—	0
'1' (31H)	1	0 * 10 + 1 = 1
'5' (35H)	5	1 * 10 + 5 = 15
'8' (38H)	8	15 * 10 + 8 = 158

The pseudocode of the `GetInt8` procedure is as follows:

```
GetInt8()
    read input character into char
    if ((char = '−') OR (char = '+'))
    then
        sign = char
        read the next character into char
    end if
    number = char − '0' {convert to numeric value}
    count = 2 {number of remaining digits to read}
repeat
    read the next character into char
    if (char ≠ carriage return)
    then
```

```
            number = number * 10 + (char – '0')
        else
            goto convert_done
        end if
        count = count – 1
    until (count = 0)
convert_done:
    {check for out-of-range error}
    if ((number > 128) OR ((number = 128) AND (sign ≠ '–')))
    then
        out of range error
        set carry flag
    else {number is OK}
        clear carry flag
    end if
    if (sign = '–')
    then
        number = –number {reverse sign}
    end if
end GetInt8
```

Program 14.3 The `GetInt8` procedure to read a signed 8-bit integer (in `getput.asm` file)

```
 1:  ;-------------------------------------------------------------
 2:  ;GetInt8 procedure reads an integer from the keyboard and
 3:  ;stores its equivalent binary in AL register. If the number
 4:  ;is within -128 and +127 (both inclusive), CF is cleared;
 5:  ;otherwise, CF is set to indicate out-of-range error.
 6:  ;No error check is done to see if the input consists of
 7:  ;digits only. All registers are preserved except for AX.
 8:  ;-------------------------------------------------------------
 9:  GetInt8:
10:        push    BX            ; save registers
11:        push    CX
12:        push    DX
13:        push    ESI
14:        sub     DX,DX         ; DX = 0
15:        sub     BX,BX         ; BX = 0
16:        GetStr  number,5      ; get input number
17:        mov     ESI,number
18:  get_next_char:
19:        mov     DL,[ESI]      ; read input from buffer
20:        cmp     DL,'-'        ; is it negative sign?
21:        je      sign          ; if so, save the sign
22:        cmp     DL,'+'        ; is it positive sign?
23:        jne     digit         ; if not, process the digit
24:  sign:
25:        mov     BH,DL         ; BH keeps sign of input number
26:        inc     ESI
```

```
27:         jmp     get_next_char
28:   digit:
29:         sub     AX,AX          ; AX = 0
30:         mov     BL,10          ; BL holds the multiplier
31:         sub     DL,'0'         ; convert ASCII to numeric
32:         mov     AL,DL
33:         mov     CX,2           ; maximum two more digits to read
34:   convert_loop:
35:         inc     ESI
36:         mov     DL,[ESI]
37:         cmp     DL,0           ; NULL?
38:         je      convert_done   ; if so, done reading the number
39:         sub     DL,'0'         ; else, convert ASCII to numeric
40:         mul     BL             ; multiply total (in AL) by 10
41:         add     AX,DX          ; and add the current digit
42:         loop    convert_loop
43:   convert_done:
44:         cmp     AX,128
45:         ja      out_of_range   ; if AX > 128, number out of range
46:         jb      number_OK      ; if AX < 128, number is valid
47:         cmp     BH,'-'         ; if AX = 128, must be a negative;
48:         jne     out_of_range   ; otherwise, an invalid number
49:   number_OK:
50:         cmp     BH,'-'         ; number negative?
51:         jne     number_done    ; if not, we are done
52:         neg     AL             ; else, convert to 2's complement
53:   number_done:
54:         clc                    ; CF = 0 (no error)
55:         jmp     done
56:   out_of_range:
57:         stc                    ; CF = 1 (range error)
58:   done:
59:         pop     ESI            ; restore registers
60:         pop     DX
61:         pop     CX
62:         pop     BX
63:         ret
```

The assembly language code for the `GetInt8` procedure is given in Program 14.3. The procedure uses `GetStr` to read the input digits into a buffer `number`. This buffer is 5 bytes long so that it can hold the sign, 3 digits, and a null character. Thus, we specify 5 in `GetStr` on line 16.

- The character input digits are converted to their numeric equivalent by subtracting '0' on lines 31 and 39.
- The multiplication is done on line 40, which produces a 16-bit result in AX. Note that the numeric value of the current digit (in DX) is added (line 41) to detect the overflow condition rather than the 8-bit value in DL.
- When the conversion is done, AX will have the absolute value of the input number. Lines 44 to 48 perform the out-of-range error check. To do this check, the following conditions are tested:

AX > 128	⇒	out of range
AX = 128	⇒	input must be a negative number to be a valid number; otherwise, out of range

The `ja` (jump if above) and `jb` (jump if below) on lines 45 and 46 are conditional jumps for unsigned numbers.

- If the input is a negative number, the value in AL is converted to the 2's complement representation by using the `neg` instruction (line 52).
- The `clc` (clear CF) and `stc` (set CF) instructions are used to indicate the error condition (lines 54 and 57).

Summary

The status flags register the outcome of arithmetic and logical operations. Of the six status flags, zero flag, carry flag, overflow flag, and sign flag are the most important. The zero flag records whether the result of an operation is zero or not. The sign flag monitors the sign of the result. The carry and overflow flags record the overflow conditions of the arithmetic operations. The carry flag is set if the result on unsigned numbers is out of range; the overflow flag is used to indicate the out-of-range condition on the signed numbers.

The IA-32 instruction set includes instructions for addition, subtraction, multiplication, and division. While the add and subtract instructions work on both unsigned and signed data, separate instructions are required for signed and unsigned numbers for performing multiplication and division operations.

The arithmetic instructions can operate on 8-, 16-, or 32-bit operands. If numbers are represented using more than 32 bits, we need to devise methods for performing the arithmetic operations on multiword operands. We gave an example to illustrate how multiword addition could be implemented.

We demonstrated that multiplication by special values (for example, multiplication by 10) can be done more efficiently by using addition. Chapter 16 discusses how the shift operations can be used to implement multiplication by a power of 2.

15

Conditional Execution

Assembly language provides several instructions to facilitate conditional execution. We have discussed some of these instructions like `jmp` *and* `loop` *in Chapter 9. Our discussion here complements that discussion. In this chapter, we give more details on these instructions including how the target address is specified, how the flags register is used to implement conditional jumps, and so on. The jump instructions we have used so far specify the target address directly. It is also possible to specify the target of jump indirectly. We describe how the target can be specified indirectly and illustrate its use of such indirect jumps by means of an example.*

Introduction

Modern high-level languages provide a variety of decision structures. These structures include selection structures such as `if-then-else` and iterative structures such as `while` and `for` loops. Assembly language, being a low-level language, does not provide these structures directly. However, assembly language provides several basic instructions that could be used to construct these high-level language selection and iteration structures. These assembly language instructions include the unconditional jump, compare, conditional jump, and loop. We briefly introduced some of these instructions in Chapter 9. In this chapter, we give more details on these instructions.

As we have seen in the previous chapters, we can specify the target address directly. In assembly language programs, we do this by specifying a label associated with the target instruction. The assembler replaces the label with the address. In general, this address can be a relative address or an absolute address. If the address is relative, the offset of the target is specified relative to the current instruction. In the absolute address case, target address is given. We start this with a discussion of these details.

We can also specify the target address indirectly, just like the address given in the indirect addressing mode. In these indirect jumps, the address is specified via a register or memory. We describe the indirect jump mechanism toward the end of the chapter. We also illustrate how the indirect jump instructions are useful in implementing multiway switch or case statements.

The IA-32 instruction set provides three types of conditional jump instructions. These include the jump instructions that test the individual flag values, jumps based on signed comparisons, and jumps based on unsigned comparisons. Our discussion of these conditional jump instructions on page 322 throws light on how the processor uses the flags to test for the various conditions.

Unconditional Jump

We introduced the unconditional jump instruction in Chapter 9. It unconditionally transfers control to the instruction located at the target address. The general format, as we have seen before, is

```
jmp     target
```

There are several versions of the `jmp` instruction depending on how the target address is specified and where the target instruction is located.

Specification of Target

There are two distinct ways by which the target address of the `jmp` instruction can be specified: *direct* and *indirect*. The vast majority of jumps are of the direct type. We have used these types of unconditional jumps in the previous chapters. Therefore, we focus our attention on the direct jump instructions and discuss the indirect jumps toward the end of the chapter.

Direct Jumps In the direct jump instruction, the target address is specified directly as part of the instruction. In the following code fragment

```
            . . .
        mov     CX,10
        jmp     CX_init_done
init_CX_20:
        mov     CX,20
CX_init_done:
        mov     AX,CX
repeat1:
        dec     CX
            . . .
        jmp     repeat1
            . . .
```

both the `jmp` instructions directly specify the target. As an assembly language programmer, you only specify the target address by using a label; the assembler figures out the exact value by using its symbol table.

The instruction

```
jmp    CX_init_done
```

transfers control to an instruction that follows it. This is called the *forward jump*. On the other hand, the instruction

```
jmp     repeat1
```

is a *backward jump*, as the control is transferred to an instruction that precedes the jump instruction.

Relative Address The address specified in a jump instruction is not the absolute address of the target. Rather, it specifies the relative displacement in bytes between the target instruction and the instruction following the jump instruction (and not from the jump instruction itself!).

In order to see why this is so, we have to understand how jumps are executed. Recall that the EIP register always points to the next instruction to be executed (see Chapter 4). Thus, after fetching the `jmp` instruction, the EIP is automatically advanced to point to the instruction following the `jmp` instruction. Execution of `jmp` involves changing the EIP from where it is currently pointing to the target instruction location. This is achieved by adding the difference (i.e., the relative displacement) to the EIP contents. This works fine because the relative displacement is a signed number—a positive displacement implies a forward jump and a negative displacement indicates a backward jump.

The specification of relative address as opposed to absolute address of the target instruction is appropriate for dynamically relocatable code (i.e., for position-independent code).

Where Is the Target? If the target of a jump instruction is located in the same segment as the jump itself, it is called an *intrasegment jump*; if the target is located in another segment, it is called an *intersegment jump*.

Our previous discussion has assumed an intrasegment jump. In this case, the `jmp` simply performs the following action:

EIP = EIP + relative-displacement

In the case of an intersegment jump, called *far jump*, the CS is also changed to point to the target segment, as shown below:

CS = target-segment
EIP = target-offset

Both target-segment and target-offset are specified directly in the instruction. Thus, for 32-bit segments, the instruction encoding for the intersegment jump takes seven bytes: one byte for the specification of the opcode, two bytes for the target-segment, and four bytes for the target-offset specification.

The majority of jumps are of the intrasegment type. Therefore, more flexibility is provided to specify the target in intrasegment jump instructions. These instructions can have *short* and *near* format, depending on the distance of the target location from the instruction following the jump instruction—that is, depending on the value of the relative displacement.

If the relative displacement, which is a signed number, can fit in a byte, a jump instruction is encoded using just two bytes: one byte for the opcode and the other for the relative displacement. This means that the relative displacement should be within −128 to +127 (the range of a signed 8-bit number). This form is called the *short jump*.

If the target is outside this range, 2 or 4 bytes are used to specify the relative displacement. A two-byte displacement is used for 16-bit segments, and 4-byte displacement for 32-bit segments. As a result, the jump instruction requires either 3 or 5 bytes to encode in the machine language. This form is called the *near jump*.

If you want to use the short jump form, you can inform the assembler of your intention by using the operator SHORT, as shown below:

```
jmp     SHORT CX_init_done
```

The question that naturally arises at this point is: What if the target is not within −128 or +127 bytes? The assembler will inform you with an error message that the target can't be reached with a short jump.

In fact, specification of SHORT in a statement like

```
                        . . .

 8 0005  EB 0C                  jmp     SHORT CX_init_done
 9 0007  B9 000A                mov     CX,10
10 000A  EB 07 90               jmp     CX_init_done
11                          init_CX_20:
12 000D  B9 0014                mov     CX,20
13 0010  E9 00D0                jmp     near_jump
14                          CX_init_done:
15 0013  8B C1                  mov     AX,CX
16                          repeat1:
17 0015  49                     dec     CX
18 0016  EB FD                  jmp     repeat1
                        . . .
                        . . .
84 00DB  EB 03                  jmp     SHORT short_jump
85 00DD  B9 FF00                mov     CX, 0FF00H
86                          short_jump:
87 00E0  BA 0020                mov     DX, 20H
88                          near_jump:
89 00E3  E9 FF27                jmp     init_CX_20
                        . . .
```

Figure 15.1 Example encoding of jump instructions.

```
jmp     SHORT repeat1
```

in the example code on page 318 is redundant, as the assembler can automatically select the SHORT jump, if appropriate, for all backward jumps. However, for forward jumps, the assembler needs your help. This is because the assembler does not know the relative displacement of the target when it must decide whether to use the short form. Therefore, use the SHORT operator only for forward jumps if appropriate.

Example 15.1 *Example encodings of short and near jumps.*
Figure 15.1 shows some example encodings for short and near jump instructions. The forward short jump on line 8 is encoded in the machine language as `EB 0C`, where `EB` represents the opcode for the short jump. The relative offset to target `CX_init_done` is `0CH`. From the code, it can be seen that this is the difference between the address of the target (address 0013H) and the instruction following the jump instruction on line 9 (address 0007H). Another example of a forward short jump is given on line 84.

The backward jump instruction on line 18 also uses the short jump form. In this case, the assembler can decide whether the short or near jump is appropriate. The relative offset is given by FDH, which is −3 in decimal. This is the offset from the instruction following the jump instruction at address 18H to `repeat1` at 15H.

For near jumps, the opcode is E9H, and the relative offset is a 16-bit signed integer. The relative offset of the forward near jump on line 13 is 00D0H, which is equal to 00E3H − 0013H. The relative offset of the backward near jump on line 89 is given by 000DH − 00E6H = FF27H, which is equal to −217 in decimal.

Table 15.1 Some examples of `cmp AL,DL`

AL	DL	CF	ZF	SF	OF	PF	AF
56	57	1	0	1	0	1	1
200	101	0	0	0	1	1	0
101	200	1	0	1	1	0	1
200	200	0	1	0	0	1	0
−105	−105	0	1	0	0	1	0
−125	−124	1	0	1	0	1	1
−124	−125	0	0	0	0	0	0

The jump instruction encoding on line 10 requires some explanation. Since this is a forward jump and we have not specified that it could be a short jump, assembler reserves 3 bytes for a near jump (the worst case scenario). At the time of actual encoding, the assembler knows the target location and therefore uses the short jump version. Thus, `EB 07` represents the encoding, and the third byte is not used and contains a nop (no operation). □

Compare Instruction

Implementation of high-level language decision structures like `if-then-else` in assembly language is a two step process:

1. An arithmetic or comparison instruction updates one or more arithmetic flags;
2. A conditional jump instruction causes selective execution of the appropriate code fragment based on the values of the flags.

We discussed the compare (`cmp`) instruction on page 199. The main purpose of the `cmp` instruction is to update the flags so that a subsequent conditional jump instruction can test these flags.

Example 15.2 *Some examples of the compare instruction.*
The four flags that are useful in establishing a relationship ($<$, $\leq$, $>$, and so on) between two integers are CF, ZF, SF, and OF. Table 15.1 gives some examples of executing the

```
cmp     AL,DL
```

instruction. Recall that CF is set if the result is out of range when treating the operands as unsigned numbers. Since the operands are 8 bits in our example, this range is 0 to 255D. Similarly, the OF is set if the result is out of range for signed numbers (for our example, this range is −128D to +127D).

In general, the value of ZF and SF can be obtained in a straightforward way. Therefore, let us focus on the carry and overflow flags. In the first example, since $56-57=-1$, CF is set but not OF.

The second example is not so simple. Treating the operands in AL and DL as unsigned numbers, 200−101 = 99, which is within the range of unsigned numbers. Therefore, CF = 0. However, when treating 200D (= C8H) as a signed number, it represents −56D. Therefore, compare performs −56−101 = −157, which is out of range for signed numbers resulting in setting OF. We will leave verification of the rest of the examples as an exercise. □

Conditional Jumps

Conditional jump instructions can be divided into three groups:

1. Jumps based on the value of a single arithmetic flag;
2. Jumps based on unsigned comparisons;
3. Jumps based on signed comparisons.

Jumps Based on Single Flags

The IA-32 instruction set provides two conditional jump instructions—one for jumps if the flag tested is set, and the other for jumps when the flag is cleared—for each arithmetic flag except the auxiliary flag. These instructions are summarized in Table 15.2.

As shown in Table 15.2, the jump instructions that test the zero and parity flags have aliases (e.g., `je` is an alias for `jz`). These aliases are provided to improve program readability. For example,

if (count = 100)
then
    <statement1>
end if

can be written in the assembly language as

```
        cmp     count,100
        jz      S1
            . . .
S1:
        <statement1 code here>
            . . .
```

But our use of `jz` does not convey that we are testing for equality. This meaning is better conveyed by

```
        cmp     count,100
        je      S1
            . . .
S1:
        <statement1 code here>
            . . .
```

The assembler, however, treats both `jz` and `je` as synonymous instructions.

The only surprising instruction in Table 15.2 is the `jecxz` instruction. This instruction does not test any flag but tests the contents of the ECX register for zero. It is often used in conjunction with the `loop` instruction. Therefore, we defer a discussion of this instruction to a later section that deals with the `loop` instruction.

Table 15.2 Jumps based on single flag value

Mnemonic	Meaning	Jumps if
Testing for zero:		
jz	jump if zero	ZF = 1
je	jump if equal	
jnz	jump if not zero	ZF = 0
jne	jump if not equal	
jecxz	jump if ECX = 0	ECX = 0 (no flags tested)
Testing for carry:		
jc	jump if carry	CF = 1
jnc	jump if no carry	CF = 0
Testing for overflow:		
jo	jump if overflow	OF = 1
jno	jump if no overflow	OF = 0
Testing for sign:		
js	jump if (negative) sign	SF = 1
jns	jump if no (negative) sign	SF = 0
Testing for parity:		
jp	jump if parity	PF = 1
jpe	jump if parity is even	
jnp	jump if not parity	PF = 0
jpo	jump if parity is odd	

Jumps Based on Unsigned Comparisons

When comparing two numbers

```
cmp     num1,num2
```

it is necessary to know whether these numbers `num1` and `num2` represent singed or unsigned numbers in order to establish a relationship between them. As an example, assume that AL = 10110111B and DL = 01101110B. Then the statement

```
cmp     AL,DL
```

should appropriately update flags to yield that AL > DL if we treat their contents as representing unsigned numbers. This is because, in unsigned representation, AL = 183D and DL = 110D. However, if the contents of AL and DL registers are treated as representing signed numbers, AL < DL

Table 15.3 Jumps based on unsigned comparison

Mnemonic	Meaning	condition tested
je jz	jump if equal jump if zero	ZF = 1
jne jnz	jump if not equal jump if not zero	ZF = 0
ja jnbe	jump if above jump if not below or equal	CF = 0 and ZF = 0
jae jnb	jump if above or equal jump if not below	CF = 0
jb jnae	jump if below jump if not above or equal	CF = 1
jbe jna	jump if below or equal jump if not above	CF = 1 or ZF = 1

as the AL register has a negative number (−73D) while the DL register has a positive number (+110D).

Note that when using a `cmp` statement like

```
cmp     num1,num2
```

we compare `num1` to `num2` (e.g., num1 < num2, num1 > num2, and so on). There are six possible relationships between two numbers:

$$\begin{aligned} \text{num1} &= \text{num2} \\ \text{num1} &\neq \text{num2} \\ \text{num1} &> \text{num2} \\ \text{num1} &\geq \text{num2} \\ \text{num1} &< \text{num2} \\ \text{num1} &\leq \text{num2} \end{aligned}$$

For the unsigned numbers, the carry and the zero flags record the necessary information in order to establish one of the above six relationships.

The six conditional jump instructions (along with six aliases) and the flag conditions tested are shown in Table 15.3. Note that "above" and "below" are used for > and < relationships for the unsigned comparisons, reserving "greater" and "less" for signed comparisons, as we shall see next.

Jumps Based on Signed Comparisons

The = and ≠ comparisons work with either signed or unsigned numbers, as we essentially compare the bit pattern for a match. For this reason, `je` and `jne` also appear in Table 15.4 for signed comparisons.

For signed comparisons, three flags record the necessary information: the sign flag (SF), the overflow flag (OF), and the zero flag (ZF). Testing for = and ≠ simply involves testing whether the ZF is set or cleared, respectively. With the singed numbers, establishing < and > relationships is somewhat tricky. Let us assume that we are executing the `cmp` instruction

```
cmp     Snum1,Snum2
```

Conditions for Snum1 > Snum2 The following table shows several examples in which `Snum1` > `Snum2` holds.

Snum1	Snum2	ZF	OF	SF
56	55	0	0	0
56	−55	0	0	0
−55	−56	0	0	0
55	−75	0	1	1

It appears from these examples that `Snum1` > `Snum2` if

	ZF	OF	SF
	0	0	0
or			
	0	1	1

That is, ZF = 0 and OF = SF. We cannot use just OF = SF because if two numbers are equal, ZF = 1 and OF = SF = 0. In fact, these conditions do imply the "greater than" relationship between `Snum1` and `Snum2`. As shown in Table 15.4, these are the conditions tested for the `jg` conditional jump.

Conditions for Snum1 < Snum2 Again, as in the previous case, we develop our intuition by means of a few examples. The following table shows several examples in which the `Snum1` < `Snum2` holds.

Snum1	Snum2	ZF	OF	SF
55	56	0	0	1
−55	56	0	0	1
−56	−55	0	0	1
−75	55	0	1	0

Table 15.4 Jumps based on signed comparison

Mnemonic	Meaning	condition tested
je jz	jump if equal jump if zero	ZF = 1
jne jnz	jump if not equal jump if not zero	ZF = 0
jg jnle	jump if greater jump if not less or equal	ZF = 0 and SF = OF
jge jnl	jump if greater or equal jump if not less	SF = OF
jl jnge	jump if less jump if not greater or equal	SF $\neq$ OF
jle jng	jump if less or equal jump if not greater	ZF = 1 or SF $\neq$ OF

It appears from these examples that `Snum1` < `Snum2` holds if the following conditions are true:

	ZF	OF	SF
	0	0	1
or			
	0	1	0

That is, ZF = 0 and OF $\neq$ SF. In this case, ZF = 0 is redundant and the condition reduces to OF $\neq$ SF. As indicated in Table 15.4, this is the condition tested by the `jl` conditional jump instruction.

A Note on Conditional Jumps

All conditional jump instructions are encoded into the machine language using only 2 bytes (like the short jump instruction). As a consequence, all jumps should be short jumps. That is, the target instruction of a conditional jump must be 128 bytes before or 127 bytes after the instruction following the conditional jump instruction.

What if the target is outside this range? If the target is not reachable by using a short jump, you can use the following trick to overcome this limitation of the conditional jump instructions. For example, in the instruction sequence

```
            . . .
target:
            . . .
        cmp     EAX,EBX
        je      target   ; target is not a short jump
        mov     ECX,10
            . . .
```

if `target` is not reachable by a short jump, it should be replaced by

```
            . . .
target:
            . . .
        cmp     EAX,EBX
        jne     skip1    ; skip1 is a short jump
        jmp     target
skip1:
        mov     ECX,10
            . . .
```

What we have done here is negated the test condition (`je` becomes `jne`) and used an unconditional jump to transfer control to target. Recall that `jmp` instruction has both *short* and *near* versions.

Looping Instructions

Instructions in this group use the CX or ECX register to maintain repetition count. The CX register is used if the operand size is 16 bits; ECX is used for 32-bit operands. In the following discussion, we assume that the operand size is 32 bits. The three loop instructions decrement the ECX register before testing it for zero. Decrementing ECX does not affect any of the flags. The format of these instructions along with the action taken is shown below.

Mnemonic	Meaning	Action
`loop target`	loop	ECX = ECX − 1 if CX $\neq$ 0 jump to target
`loope target` `loopz target`	loop while equal loop while zero	ECX = ECX − 1 if (ECX $\neq$ 0 and ZF = 1) jump to target
`loopne target` `loopnz target`	loop while not equal loop while not zero	ECX = ECX − 1 if (ECX $\neq$ 0 and ZF =0) jump to target

The destination specified in these instructions should be reachable by a short jump. This is a consequence of using the two-byte encoding with a single byte indicating the relative displacement, which should be within −128 to +127.

We have seen how the `loop` instruction is useful in constructing loops. The other two loop instructions are useful in writing loops that require two termination conditions. The following example illustrates this point.

Our First Program

Let us say that we want to write a loop that reads a series of nonzero integers into an array. The input can be terminated either when the array is full, or when the user types a zero, whichever occurs first. The program is given below.

Program 15.1 A program to read long integers into an array

```
;Reading long integers into an array          READ_ARRAY.ASM
;
;        Objective: To read long integers into an array;
;                   demonstrates the use of loopne.
;            Input: Requests nonzero values to fill the array;
;                   a zero input terminated input.
;           Output: Displays the array contents.

%include "io.mac"

MAX_SIZE       EQU   20

.DATA
input_prompt   db    "Enter at most 20 nonzero values "
               db    "(entering zero terminates input):",0
out_msg        db    "The array contents are: ",0
empty_msg      db    "The array is empty. ",0
query_msg      db    "Do you want to quit (Y/N): ",0

.UDATA
array          resd  MAX_SIZE

.CODE
        .STARTUP
read_input:
        PutStr  input_prompt ; request input array
        xor     ESI,ESI      ; ESI = 0 (ESI is used as an index)
        mov     ECX,MAX_SIZE
read_loop:
        GetLInt EAX
        mov     [array+ESI*4],EAX
        inc     ESI          ; increment array index
        cmp     EAX,0        ; number = zero?
        loopne  read_loop    ; iterates a maximum of MAX_SIZE
exit_loop:
        ; if the input is terminated by a zero,
        ; decrement ESI to keep the array size
```

```
38:             jnz     skip
39:             dec     ESI
40:     skip:
41:             mov     ECX,ESI         ; ESI has the actual array size
42:             jecxz   empty_array     ; if ecx = 0, empty array
43:             xor     ESI,ESI         ; initalize index to zero
44:             PutStr  out_msg
45:     write_loop:
46:             PutLInt [array+ESI*4]
47:             nwln
48:             inc     ESI
49:             loop    write_loop
50:             jmp     short user_query
51:     empty_array:
52:             PutStr  empty_msg       ; output empty array message
53:             nwln
54:     user_query:
55:             PutStr  query_msg       ; query user whether to terminate
56:             GetCh   AL
57:             cmp     AL,'Y'          ; if response is not 'Y'
58:             jne     read_input      ; repeat the loop
59:     done:
60:             .EXIT
```

The program has two loops: a read loop and a write loop. The read loop consists of lines 29–34. The loop termination conditions are implemented by the `loopne` instruction on line 34. To facilitate termination of the loop after reading a maximum of `MAX_SIZE` integers, the ECX register is initialized to `MAX_SIZE` on line 28. The other termination condition is tested on line 33.

The write loop consists of the code on lines 45–49. It uses the `loop` instruction (line 49) to iterate the loop where the loop count in ECX is the number of valid integers given by the user. However, we have a problem with the loop instruction: if the user did not enter any nonzero integers, the count in ECX is zero. In this case, the write loop iterates the maximum number of times (not zero times) because it decrements ECX before testing for zero. This is not what we want!

The instruction `jecxz` provides a remedy for this situation by testing the ECX register. The syntax of this instruction is

```
jecxz    target
```

which tests the ECX register and if it is zero, control is transferred to the target instruction. Thus, it is equivalent to

```
cmp     ECX,0
jz      target
```

except that `jecxz` does not affect any of the flags, while the `cmp/jz` combination affects the status flags. If the operand size is 16 bits, we can use the `jcxz` instruction instead of `jecxz`. Both instructions, however, use the same opcode E3H. The operand size determines the register—CX or ECX—used. We use this instruction on line 42 to test for an empty array. The rest of the code is straightforward to follow.

Notes on Execution Times of `loop` and `jecxz` Instructions

1. The functionality of the `loop` instruction can be replaced by

```
dec     ECX
jnz     target
```

   Surprisingly, the `loop` instruction is slower than the corresponding `dec/jnz` instruction pair.

2. Similarly, the `jecxz` instruction is slower than the code shown below:

```
cmp     ECX,0
jz      target
```

   Thus, for code optimization, these complex instructions should be avoided. However, for illustrative purposes, we use these instructions in the following examples.

Illustrative Examples

In this section, we present two examples to show the use of the selection and iteration instructions discussed in this chapter. The first example uses linear search for locating a number in an unsorted array, and the second example sorts an array of integers using the selection sort algorithm.

Example 15.3 *Linear search of an integer array.*
In this example, the user is asked to input an array of non-negative integers and then query whether a given number is in the array or not. The program, shown below, uses a procedure that implements the linear search to locate a number in an unsorted array.

The `main` procedure initializes the input array by reading a maximum of `MAX_SIZE` number of non-negative integers into the array. The user, however, can terminate the input by entering a negative number. The `loop` instruction (line 36), with ECX initialized to `MAX_SIZE` (line 29), is used to iterate a maximum of `MAX_SIZE` times. The other loop termination condition (i.e., entering a negative number) is tested on lines 32 and 33. The rest of the main program queries the user for a number and calls the linear search procedure to locate the number. This process is repeated as long as the user appropriately answers the query.

Program 15.2 Linear search of an integer array

```
 1:  ;Linear search of integer array                LIN_SRCH.ASM
 2:  ;
 3:  ;        Objective: To implement linear search on an integer
 4:  ;                   array.
 5:  ;            Input: Requests numbers to fill array and a
 6:  ;                   number to be searched for from user.
 7:  ;           Output: Displays the position of the number in
 8:  ;                   the array if found; otherwise, not found
 9:  ;                   message.
10:  %include "io.mac"
11:
12:  MAX_SIZE       EQU   20
```

```
13:
14:  .DATA
15:  input_prompt   db    "Please enter input values "
16:                 db    "(a negative value terminates input):",0
17:  query_number   db    "Enter the number to be searched: ",0
18:  out_msg        db    "The number is at position ",0
19:  not_found_msg  db    "Number not in the array!",0
20:  query_msg      db    "Do you want to quit (Y/N): ",0
21:
22:  .UDATA
23:  array          resw  MAX_SIZE
24:
25:  .CODE
26:          .STARTUP
27:          PutStr  input_prompt
28:          xor     ESI,ESI       ; index = 0
29:          mov     ECX,MAX_SIZE
30:  array_loop:
31:          GetInt  AX
32:          cmp     AX,0          ; negative number?
33:          jl      read_input    ; if so, stop reading numbers
34:          mov     [array+ESI*2],AX
35:          inc     ESI           ; increment array index
36:          loop    array_loop    ; iterates a maximum of MAX_SIZE
37:  read_input:
38:          PutStr  query_number ; request a number to be searched
39:          GetInt  AX
40:          push    AX            ; push number, size & array pointer
41:          push    ESI
42:          push    array
43:          call    linear_search
44:          ; linear_search returns in AX the position of the number
45:          ; in the array; if not found, it returns 0.
46:          cmp     AX,0          ; number found?
47:          je      not_found     ; if not, display number not found
48:          PutStr  out_msg       ; else, display number position
49:          PutInt  AX
50:          jmp     SHORT user_query
51:  not_found:
52:          PutStr  not_found_msg
53:  user_query:
54:          nwln
55:          PutStr  query_msg     ; query user whether to terminate
56:          GetCh   AL
57:          cmp     AL,'Y'        ; if response is not 'Y'
58:          jne     read_input    ; repeat the loop
59:  done:
60:          .EXIT
61:
62:  ;-------------------------------------------------------------
63:  ; This procedure receives a pointer to an array of integers,
```

```
64:  ; the array size, and a number to be searched via the stack.
65:  ; If found, it returns in AX the position of the number in
66:  ; the array; otherwise, returns 0.
67:  ; All registers, except EAX, are preserved.
68:  ;-----------------------------------------------------------
69:  linear_search:
70:          enter   0,0
71:          push    EBX             ; save registers
72:          push    ECX
73:          mov     EBX,[EBP+8]     ; copy array pointer
74:          mov     ECX,[EBP+12]    ; copy array size
75:          mov     AX,[EBP+16]     ; copy number to be searched
76:          sub     EBX,2           ; adjust pointer to enter loop
77:  search_loop:
78:          add     EBX,2           ; update array pointer
79:          cmp     AX,[EBX]        ; compare the numbers
80:          loopne  search_loop
81:          mov     AX,0            ; set return value to zero
82:          jne     number_not_found
83:          mov     EAX,[EBP+12]    ; copy array size
84:          sub     EAX,ECX         ; compute array index of number
85:  number_not_found:
86:          pop     ECX             ; restore registers
87:          pop     EBX
88:          leave
89:          ret     10
```

The linear search procedure receives a pointer to an array, its size, and the number to be searched via the stack. The search process starts at the first element of the array and proceeds until either the element is located or the array is exhausted. We use the `loopne` instruction on line 80 to test these two conditions for the termination of the search loop. The ECX is initialized (line 74) to the size of the array. In addition, a compare (line 79) tests if there is a match between the two numbers. If so, the zero flag is set and `loopne` terminates the search loop. If the number is found, the index of the number is computed (lines 83 and 84) and returned in the EAX register.

Example 15.4 *Sorting of an integer array using the selection sort algorithm.*
The main program is very similar to that in the last example, except for the portion that displays the sorted array. The sort procedure receives a pointer to the array to be sorted and its size via the stack. It uses the selection sort algorithm to sort the array in ascending order. The basic idea is as follows:

1. Search the array for the smallest element;
2. Move the smallest element to the first position by exchanging values of the first and smallest element positions;
3. Search the array for the smallest element from the second position of the array;
4. Move this element to position 2 by exchanging values as in Step 2;
5. Continue this process until the array is sorted.

The selection sort procedure implements the following pseudocode:

```
selection_sort (array, size)
    for (position = 0 to size−2)
        min_value := array[position]
        min_position := position
        for (j = position+1 to size−1)
            if (array[j] < min_value)
            then
                min_value := array[j]
                min_position := j
            end if
        end for
        if (position ≠ min_position)
        then
            array[min_position] := array[position]
            array[position] := min_value
        end if
    end for
end selection_sort
```

The selection sort procedure, shown in Program 15.3, implements this pseudocode with the following mapping of variables: `position` is maintained in ESI, and EDI is used for the index variable `j`. The `min_value` variable is maintained in DX and `min_position` in AX. The number of elements to be searched for finding the minimum value is kept in ECX.

Program 15.3 Sorting of an integer array using the selection sort algorithm

```
;Sorting an array by selection sort          SEL_SORT.ASM
;
;        Objective: To sort an integer array using
;                   selection sort.
;            Input: Requests numbers to fill array.
;           Output: Displays sorted array.
%include "io.mac"

MAX_SIZE       EQU   100

.DATA
input_prompt     db    "Please enter input array (a negative "
                 db    "number terminates the input):",0
out_msg          db    "The sorted array is:",0
empty_array_msg  db    "Empty array!",0

.UDATA
array          resw  MAX_SIZE

.CODE
        .STARTUP
        PutStr  input_prompt ; request input array
        xor     ESI,ESI      ; array index = 0
```

```
24:         mov     ECX,MAX_SIZE
25:  array_loop:
26:         GetInt  AX
27:         cmp     AX,0            ; negative number?
28:         jl      exit_loop       ; if so, stop reading numbers
29:         mov     [array+ESI*2],AX
30:         inc     ESI             ; increment array index
31:         loop    array_loop      ; iterates a maximum of MAX_SIZE
32:  exit_loop:
33:         push    ESI             ; push array size & array pointer
34:         push    array
35:         call    selection_sort
36:         mov     ECX,ESI         ; ECX = array size
37:         jecxz   empty_array     ; check for empty array
38:         PutStr  out_msg         ; display sorted array
39:         nwln
40:         mov     EBX,array
41:         xor     ESI,ESI
42:  display_loop:
43:         PutInt  [array+ESI*2]
44:         nwln
45:         inc     ESI
46:         loop    display_loop
47:         jmp     short done
48:  empty_array:
49:         PutStr  empty_array_msg
50:         nwln
51:  done:
52:         .EXIT
53:
54:  ;-----------------------------------------------------------
55:  ; This procedure receives a pointer to an array of integers
56:  ; and the array size via the stack. The array is sorted by
57:  ; using the selection sort. All registers are preserved.
58:  ;-----------------------------------------------------------
59:  %define SORT_ARRAY  EBX
60:  selection_sort:
61:        pushad                    ; save registers
62:        mov     EBP,ESP
63:        mov     EBX,[EBP+36]      ; copy array pointer
64:        mov     ECX,[EBP+40]      ; copy array size
65:        cmp     ECX,1
66:        jle     sel_sort_done
67:        sub     ESI,ESI           ; array left of ESI is sorted
68:  sort_outer_loop:
69:        mov     EDI,ESI
70:        ; DX is used to maintain the minimum value and AX
71:        ; stores the pointer to the minimum value
72:        mov     DX,[SORT_ARRAY+ESI*2]  ; min. value is in DX
73:        mov     EAX,ESI           ; EAX = pointer to min. value
74:        push    ECX
```

```
        dec     ECX             ; size of array left of ESI
sort_inner_loop:
        inc     EDI             ; move to next element
        cmp     DX,[SORT_ARRAY+EDI*2] ; less than min. value?
        jle     skip1           ; if not, no change to min. value
        mov     DX,[SORT_ARRAY+EDI*2]; else, update min. value (DX)
        mov     EAX,EDI                 ; & its pointer (EAX)
skip1:
        loop    sort_inner_loop
        pop     ECX
        cmp     EAX,ESI     ; EAX = ESI?
        je      skip2       ; if so, element at ESI is in its place
        mov     EDI,EAX     ; otherwise, exchange
        mov     AX,[SORT_ARRAY+ESI*2]   ; exchange min. value
        xchg    AX,[SORT_ARRAY+EDI*2]   ; & element at ESI
        mov     [SORT_ARRAY+ESI*2],AX
skip2:
        inc     ESI             ; move ESI to next element
        dec     ECX
        cmp     ECX,1           ; if ECX = 1, we are done
        jne     sort_outer_loop
sel_sort_done:
        popad                   ; restore registers
        ret     8
```

Indirect Jumps

So far, we have used only the direct jump instruction. In direct jump, the target address (i.e., its relative offset value) is encoded into the jump instruction itself (see Figure 15.1 on page 320). We now look at indirect jumps. We limit our discussion to jumps within a segment.

In an indirect jump, the target address is specified indirectly either through memory or a general-purpose register. Thus, we can write

```
jmp     [ECX]
```

if the ECX register contains the offset of the target. In indirect jumps, the target offset is the absolute value (unlike the direct jumps, which use a relative offset value). The next example shows how indirect jumps can be used with a jump table stored in memory.

Example 15.5 *An example with an indirect jump.*
The objective here is to show how we can use the indirect jump instruction. To this end, we show a simple program that reads a digit from the user and prints the corresponding choice represented by the input. The listing is shown in Program 15.4. An input between 0 and 9 is valid. If the input is 0, 1, or 2, it displays a simple message to indicate the class selection. Other digit inputs terminate the program. If a nondigit input is given to the program, it displays an error message and requests a valid digit input.

Program 15.4 An example demonstrating the use of the indirect jump

```
;Sample indirect jump example                          IJUMP.ASM
;
;        Objective: To demonstrate the use of indirect jump.
;            Input: Requests a digit character from the user.
;           Output: Appropriate class selection message.
%include "io.mac"

.DATA
jump_table  dd  code_for_0   ; indirect jump pointer table
            dd  code_for_1
            dd  code_for_2
            dd  default_code ; default code for digits 3-9
            dd  default_code
            dd  default_code
            dd  default_code
            dd  default_code
            dd  default_code
            dd  default_code

prompt_msg  db  "Type a digit: ",0
msg_0       db  "Economy class selected.",0
msg_1       db  "Business class selected.",0
msg_2       db  "First class selected.",0
msg_default db  "Not a valid code!",0
msg_nodigit db  "Not a digit! Try again.",0

.CODE
        .STARTUP
read_again:
        PutStr   prompt_msg     ; request a digit
        sub      EAX,EAX        ; EAX = 0
        GetCh    AL             ; read input digit and
        cmp      AL,'0'         ; check to see if it is a digit
        jb       not_digit
        cmp      AL,'9'
        ja       not_digit
        ; if digit, proceed
        sub      AL,'0'         ; convert to numeric equivalent
        mov      ESI,EAX        ; ESI is index into jump table
        jmp      [jump_table+ESI*4] ; indirect jump based on ESI
test_termination:
        cmp      AL,2
        ja       done
        jmp      read_again
code_for_0:
        PutStr   msg_0
        nwln
        jmp      test_termination
code_for_1:
        PutStr   msg_1
```

```
51:             nwln
52:             jmp     test_termination
53:     code_for_2:
54:             PutStr  msg_2
55:             nwln
56:             jmp     test_termination
57:     default_code:
58:             PutStr  msg_default
59:             nwln
60:             jmp     test_termination
61:
62:     not_digit:
63:             PutStr  msg_nodigit
64:             nwln
65:             jmp     read_again
66:     done:
67:             .EXIT
```

In order to use the indirect jump, we have to build a jump table of pointers (see lines 9–18). The input is tested for its validity on lines 33 to 36. If the input is a digit, it is converted to act as an index into the jump table and stored in ESI. This value is used in the indirect jump instruction (line 40). The rest of the program is straightforward to follow.

Multiway Conditional Statements

In high-level languages, a two- or three-way conditional execution can be controlled easily by using `if` statements. For large multiway conditional execution, writing the code with nested `if` statements is tedious and error prone. High-level languages like C provide a special construct for multiway conditional execution. In this section we look at the C `switch` construct for multiway conditional execution.

Example 15.6 *Multiway conditional execution in C.*
As an example of the `switch` statement, consider the following code:

```
switch (ch)
{
    case 'a':
            count[0]++; /* increment count[0] */
            break;
    case 'b':
            count[1]++;
            break;
    case 'c':
            count[2]++;
            break;
    case 'd':
            count[3]++;
            break;
    case 'e':
            count[4]++;
```

```
            break;
    default:
            count[5]++;
}
```

The semantics of the switch statement are as follows: If character `ch` is `a`, it executes the `count[0]++` statement. The `break` statement is necessary to escape out of the `switch` statement. Similarly, if `ch` is `b`, `count[1]` is incremented, and so on. The `default` case statement is executed if `ch` is not one of the values specified in the other case statements.

The assembly language code generated by `gcc` (with `-s` option) is shown below. Note that `gcc` uses AT&T syntax, which is different from the syntax we have been using here. The assembly code is embellished for easy reading. We will discuss the AT&T syntax in Chapter 21 (see page 434).

```
 1:  main:
 2:              . . .
 3:              . . .
 4:      mov     EAX,ch
 5:      sub     EAX,97     ; 97 = ASCII for 'a'
 6:      cmp     EAX,4
 7:      ja      default
 8:      jmp     [jump_table+EAX*4]
 9:
10:      section    .rodata
11:      .align  4
12:  jump_table:
13:             dd      case_a
14:             dd      case_b
15:             dd      case_c
16:             dd      case_d
17:             dd      case_e
18:      .text
19:  case_a:
20:          inc     dword ptr[EBP-56]
21:  end_switch:
22:              . . .
23:              . . .
24:          leave
25:          ret
26:  case_b:
27:          inc     dword ptr[EBP-52]
28:          jmp     end_switch
29:  case_c:
30:          inc     dword ptr[EBP-48]
31:          jmp     end_switch
32:  case_d:
33:          inc     dword ptr[EBP-44]
34:          jmp     end_switch
35:  case_e:
36:          inc     dword ptr[EBP-40]
37:          jmp     end_switch
```

```
38:  default:
39:            inc     WORD PTR [EBP-20]
40:            jmp     end_switch
41:              . . .
42:              . . .
```

The character to be tested is moved to the EAX register. The subtract and compare instructions on lines 5 and 6 check if the character is within the range of the case values (i.e., between `a` and `e`). If not, the conditional jump instruction on line 7 transfers control to the `default` case. If it is one of the five lowercase letters, the indirect jump instruction on line 8 transfers control to the appropriate case using the jump table on lines 12–17. Since each entry in this jump table is four bytes long, we use a scale factor of 4 in this jump instruction. □

Summary

We discussed unconditional and conditional jump instructions as well as compare and loop instructions in detail. These assembly language instructions are useful in implementing high-level language selection and iteration constructs such as `if-then-else` and `while` loops. Through detailed examples, we have shown how these instructions are used in the assembly language.

In the previous chapters, we extensively used direct jump instructions. In this chapter, we introduced the indirect jump instruction. In this jump instruction, the target of the jump is specified indirectly. Indirect jumps are useful to implement multiway conditional statements such as the `switch` statement in C. By means of an example, we have shown how such multiway statements of high-level languages are implemented in the assembly language.

16

Logical and Bit Operations

Bit manipulation is an important aspect of many high-level languages. This chapter discusses the logical and bit manipulation instructions supported by the assembly language. Assembly language provides several logical instructions to implement logical expressions. These instructions are also useful in implementing bitwise logical operations. In addition, several shift and rotate instructions are provided to facilitate bit manipulation. A few instructions are also provided to test and modify bits. These four types of instructions are discussed in this chapter. After describing these instructions, we give several examples to illustrate their application. The chapter concludes with a summary.

Introduction

Modern high-level languages provide several conditional and loop constructs. These constructs require Boolean or logical expressions for specifying conditions. Assembly language provides several logical instructions to express these conditions. These instructions manipulate logical data just like the arithmetic instructions manipulate arithmetic data (e.g., integers) with operations such as addition and subtraction. The logical data can take one of two possible values: `true` or `false`.

As the logical data can assume only one of two values, a single bit is sufficient to represent these values. Thus, all logical instructions that we discuss here operate on a bit-by-bit basis. By convention, if the value of the bit is 0 it represents `false`, and a value of 1 represents `true`.

We have discussed the assembly language logical instructions in Chapter 9, we devote part of this chapter to look at the typical uses for these logical instructions. The assembly language also provides several shift and rotate instructions. The shift instructions are very efficient in performing multiplication and division of signed and unsigned integers by a power of 2. We use examples to illustrate how this can be done using the shift instructions. Several bit manipulation instructions are also provided by the assembly language. These instructions can be used to test a specific bit, to scan for a bit, and so on. A detailed discussion of these instructions is provided in the later part of this chapter.

Logical Instructions

Assembly language provides a total of five logical instructions: `and`, `or`, `not`, `xor`, and `test`. Except for the `not` operator, all of the logical operators are binary operators (i.e., they require two operands). These instructions operate on 8-, 16-, or 32-bit operands.

All of these logical instructions affect the status flags. Since operands of these instructions are treated as a sequence of independent bits, these instructions do not generate carry or overflow. Therefore, the carry (CF) and overflow (OF) flags are cleared, and the status of the auxiliary flag (AF) is undefined.

Only the remaining three arithmetic flags—the zero flag (ZF), the sign flag (SF), and the parity flag (PF)—record useful information about the results of these logical instructions. Since we discussed these instructions in Chapter 9, we look at their typical use in this chapter.

The logical instructions are useful in implementing logical expressions of high-level languages. For example, C provides the following two logical operators:

C operator	Meaning
`&&`	AND
`||`	OR

These logical operators can be implemented using the corresponding assembly language logical instructions.

Some high-level languages provide bitwise logical operators. For example, C provides bitwise `and` (`&`), `or` (`|`), `xor` (`^`), and `not` (`~`) operators. These can be implemented by using the logical instructions provided in the assembly language.

Table 16.1 shows how the logical instructions are used to implement the bitwise logical operators of the C language. The variable `mask` is assumed to be in the ESI register.

Table 16.1 Examples of C bitwise logical operators

C statement	Assembly language instruction
`mask = ~mask` (complement mask)	`not ESI`
`mask = mask & 85` (bitwise and)	`and ESI,85`
`mask = mask | 85` (bitwise or)	`or ESI,85`
`mask = mask ^ 85` (bitwise xor)	`xor ESI,85`

The `and` Instruction

The `and` instruction is useful mainly in three situations:

1. To support compound logical expressions and bitwise and operations of high-level languages;
2. To clear one or more bits;
3. To isolate one or more bits.

As we have already discussed the first use, here we concentrate on how and can be used to clear and isolate selected bits of an operand.

Clearing Bits If you look at the truth table of the and operation (see page 204), you will notice that the source b_i acts as a *masking* bit: if the masking bit is 0, the output is 0 no matter what the other input bit is; if the masking bit is 1, the other input bit is passed to the output.
Consider the following example:

```
                AL = 11010110  ← operand to be manipulated
                BL = 11111100  ← mask byte
and   AL,BL = 11010100
```

Here, AL contains the operand to be modified by bit manipulation and BL contains a set of masking bits. Let us say that we want to force the least significant two bits to 0 without altering any of the remaining 6 bits. We select our mask in BL such that it contains 0's in those two bit positions and 1's in the remainder of the masking byte. As you can see from this example, the and instruction produces the desired result.

Here is another example that utilizes the bit clearing capability of the and instruction.

Example 16.1 *Even-parity generation (partial code).*
Let us consider generation of even parity. Assume that the most significant bit of a byte represents the parity bit; the rest of the byte stores the data bits. The parity bit can be set or cleared so as to make the number of 1's in the whole byte even.

If the number of 1's in the least significant 7 bits is even, the parity bit should be 0. Assuming that the byte to be parity-encoded is in the AL register, the following statement

```
and     AL,7FH
```

clears the parity bit without altering the remaining 7 bits. Notice that the mask 7FH has a 0 only in the parity bit position. □

Isolating Bits Another typical use of the and instruction is to isolate selected bit(s) for testing. This is done by masking out all the other bits, as shown in the next example.

Example 16.2 *Finding an odd or even number.*
In this example, we want to find out if the unsigned 8-bit number in the AL register is an odd or an even number. A simple test to determine this is to check the least significant bit of the number: if this bit is 1, it is an odd number; otherwise, an even number. Here is the code to perform this test using the and instruction.

```
        and     AL,1        ; mask = 00000001B
        jz      even_number
odd_number:
```

```
            . . .
        <code for processing odd number>
            . . .
even_number:
            . . .
        <code for processing even number>
            . . .
```

If AL has an even number, the least significant bit of AL is 0. Therefore,

```
and     AL,1
```

would produce a zero result in AL and sets the zero flag. The `jz` instruction is then used to test the status of the zero flag and to selectively execute the appropriate code fragment. This example shows the use of `and` to isolate a bit—the least significant bit in this case. □

The `or` Instruction

Like the `and` instruction, the `or` instruction is useful in two applications:

1. To support compound logical expressions and bitwise `or` operations of high-level languages;
2. To set one or more bits.

The use of the `or` instruction to express compound logical expressions and to implement bitwise `or` operations has been discussed before. We now discuss how the `or` instruction can be used to set a given set of bits.

As you can see from the truth table for the `or` operation (see page 204), when the source b_i is 0, the other input is passed on to the output; when the source b_i is 1, the output is forced to take a value of 1 irrespective of the other input. This property is used to set bits in the output. This is illustrated in the following example.

```
                AL = 11010110B  ← operand to be manipulated
                BL = 00000011B  ← mask byte
or      AL,BL = 11010111B
```

The mask value in the BL register causes the least significant two bits to change to 1. Here is another example.

Example 16.3 *Even-parity encoding (partial code).*
Consider the even-parity encoding discussed in Example 16.1. If the number of 1's in the least significant 7 bits is odd, we have to make the parity bit 1 so that the total number of 1's is even. This is done by

```
or      AL,80H
```

assuming that the byte to be parity-encoded is in the AL register. This `or` operation forces the parity bit to 1 while leaving the remainder of the byte unchanged. □

Cutting and Pasting Bits The `and` and `or` instructions can be used together to "cut and paste" bits from two or more operands. We have already seen that `and` can be used to isolate selected

bits—analogous to the "cut" operation. The `or` instruction can be used to "paste" the bits. For example, the following code creates a new byte in AL by combining odd bits from AL and even bits from BL registers.

```
and     AL,55H    ; cut odd bits
and     BL,0AAH   ; cut even bits
or      AL,BL     ; paste them together
```

The first `and` instruction selects only the odd bits from the AL register by forcing all even bits to 0 by using the mask 55H (01010101B). The second `and` instruction selects the even bits by using the mask AAH (10101010B). The `or` insstruction simply pastes these two bytes together to produce the desired byte in the AL register.

The `xor` Instruction

The `xor` instruction is useful mainly in three different situations:

1. To support compound logical expressions of high-level languages;
2. To toggle one or more bits;
3. To initialize registers to zero.

The use of the `xor` instruction to express compound logical expression has been discussed before. Here we focus on the use of `xor` to toggle bits and to initialize registers to zero.

Toggling Bits Using the `xor` instruction, we can toggle a specific set of bits. To do this, the mask should have 1 in the bit positions that are to be flipped. The following example illustrates this application of the `xor` instruction.

Example 16.4 *Parity conversion.*
Suppose we want to change the parity encoding of incoming data—if even parity, change to odd parity and vice versa. To accomplish this change, all we have to do is flip the parity bit, which can be done by

```
xor     AL,80H
```

Thus, an even-parity encoded ASCII character A—01000001B—is transformed into its odd-parity encoding, as shown below:

```
     01000001B ← even-parity encoded ASCII character A
xor  10000000B ← mask byte
     ----------
     11000001B ← odd-parity encoded ASCII character A
```

Notice that if we perform the same `xor` operation on odd-parity encoding of A, we get back the even-parity encoding! This is an interesting property of the `xor` operation: `xor`ing twice gives back the original value. This is not hard to understand, as `xor` behaves like the `not` operation by selectively flipping bits. This property is used in the following example to encrypt a byte. □

Example 16.5 *Encryption of data.*
Data encryption is useful in applications that deal with sensitive data. We can write a simple encryption program by using the `xor` instruction. The idea is that we will use the encryption key as the mask byte of the `xor` instruction as shown below. Assume that the byte to be encrypted is in the AL register and the encryption key is A6H.

```
; read a data byte into AL
xor     AL,0A6H
; write the data byte back from AL
```

Suppose we have received character `B`, whose ASCII code is 01000010B. After encryption, the character becomes `d` in ASCII, as shown below.

```
01000010B  ← ASCII character B
00100110B  ← encryption key (mask)
--------
01100100B  ← ASCII character d
```

An encrypted data file can be transformed back into normal form by running the encrypted data through the same encryption process again. To continue with our example, if the above encrypted character code 64H (representing d) is passed through the encryption procedure, we get 42H, which is the ASCII code for character `B`. □

Initialization of Registers Another use of the `xor` instruction is to initialize registers to 0. We can, of course, do this by

```
mov     EAX,0
```

but the same result can be achieved by

```
xor     EAX,EAX
```

This works no matter what the contents of the EAX register are. To see why this is so, look at the truth table for the `xor` operation given on page 204. Since we are using the same operand as both inputs, the input can be either both 0 or 1. In both cases, the result bit is 0—see the first and last rows of the `xor` truth table.

These two instructions, however, are not exactly equivalent. The `xor` instruction affects flags, whereas the `mov` instruction does not. Of course, we can also use the `sub` instruction to do the same. All three instructions take one clock cycle to execute, even though the `mov` instruction requires more bytes to encode the instruction.

The `not` Instruction

The `not` instruction is used for complementing bits. Its main use is in supporting logical expressions of high-level languages and bitwise-NOT operations.

Another possible use for the `not` instruction is to compute 1's complement. Recall that 1's complement of a number is simply the complement of the number. Since most systems use the 2's complement number representation system, generating 2's complement of an 8-bit signed number using `not` involves

```
not     AL
inc     AL
```

However, the IA-32 instruction set also provides the `neg` instruction to reverse the sign of a number. Thus, the `not` instruction is not useful for this purpose.

The `test` Instruction

The `test` instruction is the logical equivalent of the compare (`cmp`) instruction. It performs the logical `and` operation but, unlike the `and` instruction, `test` does not alter the destination operand. That is, `test` is a nondestructive `and` instruction.

This instruction is used only to update the flags, and a conditional jump instruction normally follows it. For instance, in Example 16.2 on page 343, the instruction

```
and   AL,1
```

destroys the contents of the AL register. If our purpose is to test whether the unsigned number in the AL register is an odd number, we can do this using `test` without destroying the original number. For convenience, the example is reproduced below with the `test` instruction.

```
        test   AL,1      ; mask = 00000001B
        jz     even_number
odd_number:
            . . .
even_number:
            . . .
```

Shift Instructions

The instruction set provides two types of shift instructions: one for logical shifts, and the other for arithmetic shifts. The logical shift instructions are:

`shl` (SHift Left)
`shr` (SHift Right)

and the arithmetic shift instructions are

`sal` (Shift Arithmetic Left)
`sar` (Shift Arithmetic Right)

Another way of looking at these two types of shift instructions is that the logical type instructions work on unsigned binary numbers, and the arithmetic type work on signed binary numbers. We will get back to this discussion later in this section.

Effect on Flags As in the logical instructions, the auxiliary flag is undefined following a shift instruction. The carry flag (CF), zero flag (ZF), and parity flag (PF) are updated to reflect the result of a shift instruction. The CF always contains the bit last shifted out of the operand. The OF is undefined following a multibit shift. In a single-bit shift, OF is set if the sign bit has been changed as a result of the shift operation; OF is cleared otherwise. The OF is rarely tested in a shift operation; we often test the CF and ZF flags.

Logical Shift Instructions

Since we discussed the logical shift instructions in Chapter 9, we discuss their usage here. These instructions are useful mainly in two situations:

1. To implement the shift operations of high-level languages;
2. To manipulate bits;
3. To multiply and divide unsigned numbers by a power of 2.

Table 16.2 Examples of bitwise logical operators

C statement	Assembly language instruction
`mask = mask>>2` (right-shift mask by two bit positions)	`shr SI,2`
`mask = mask<<4` (left-shift mask by four bit positions)	`shl SI,4`

Shift Operations Some high level languages provide left- and right-shift operations. For example, the C language provides two shift operators: left shift (<<) and right shift (>>). These operators can be implemented with the assembly language shift instructions.

Table 16.2 shows how the shift instructions are used to implement the shift operators of the C language. The variable `mask` is assumed to be in the SI register.

Bit Manipulation The shift operations provide flexibility to manipulate bits as illustrated by the following example.

Example 16.6 *Another encryption example.*
Consider the encryption example discussed on page 346. In this example, we use the following encryption algorithm: encrypting a byte involves exchanging the upper and lower nibbles (i.e., 4 bits). This algorithm also allows the recovery of the original data by applying the encryption twice, as in the `xor` example on page 346.

Assuming that the byte to be encrypted is in the AL register, the following code implements this algorithm:

```
; AL contains the byte to be encrypted
mov     AH,AL
shl     AL,4      ; move lower nibble to upper
shr     AH,4      ; move upper nibble to lower
or      AL,AH     ; paste them together
; AL has the encrypted byte
```

To understand this code, let us trace the execution by assuming that AL has the ASCII character A. Therefore,

```
AH = AL = 01000001B
```

The idea is to move the upper nibble to lower in the AH register, and the other way around in the AL register. To do this, we use `shl` and `shr` instructions. The `shl` instruction replaces the shifted bits by 0's and after the `shl`

```
AL = 00010000B
```

Similarly, `shr` introduces 0's in the vacated bits on the left. Thus, after the `shr` instruction

```
AH = 00000100B
```

Table 16.3 Doubling and halving of unsigned numbers

Binary number	Decimal value
00011100	28
00111000	56
01110000	112
11100000	224
10101000	168
01010100	84
00101010	42
00010101	21

The `or` instruction pastes these two bytes together, as shown below:

```
          AL = 00010000B
          AH = 00000100B
or     AL,AH = 00010100B
```

We show later that this encryption can be done better by using a rotate instruction (see Example 16.7 on page 353). □

Multiplication and Division Shift operations are very effective in performing doubling or halving of unsigned binary numbers. More generally, they can be used to multiply or divide unsigned binary numbers by a power of 2.

In the decimal number system, we can easily perform multiplication and division by a power of 10. For example, if we want to multiply 254 by 10, we will simply append a 0 at the right (analogous to shifting left by a digit with the vacated digit receiving a 0). Similarly, division of 750 by 10 can be accomplished by throwing away the 0 on the right (analogous to right shift by a digit).

Since computers use the binary number system, they can perform multiplication and division by a power of 2. This point is further clarified in Table 16.3. The first half of this table shows how shifting a binary number to the left by one bit position results in multiplying it by 2. Note that the vacated bits are replaced by 0's. This is exactly what the `shl` instruction does. Therefore, if we want to multiply a number by 8 (i.e., 2^3), we can do so by shifting the number left by three bit positions.

Similarly, as shown in the second half of the table, shifting the number right by one bit position is equivalent to dividing it by 2. Thus, we can use the `shr` instruction to perform division by a power of 2. For example, to divide a number by 32 (i.e., 2^5), we right shift the number by five bit positions. Remember that this division process corresponds to integer division, which discards any fractional part of the result.

Table 16.4 Doubling of signed numbers

Signed binary number	Decimal value
00001011	+11
00010110	+22
00101100	+44
01011000	+88
11110101	–11
11101010	–22
11010100	–44
10101000	–88

Arithmetic Shift Instructions

This set of shift instructions

`sal` (Shift Arithmetic Left)
`sar` (Shift Arithmetic Right)

can be used to shift signed numbers left or right, as shown below.

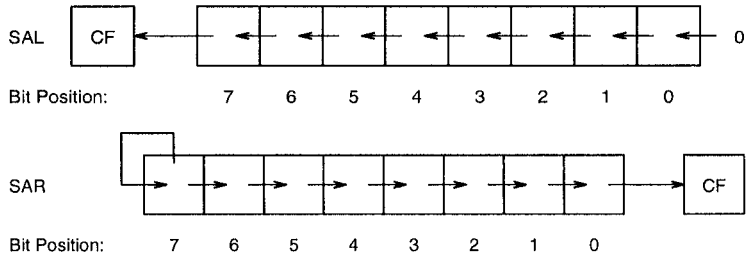

As with the logical shift instructions, the CL register can be used to specify the count value. The general format is

```
sal     destination,count        sar     destination,count
sal     destination,CL           sar     destination,CL
```

Doubling Signed Numbers Doubling a signed number by shifting it left by one bit position may appear to cause problems because the leftmost bit is used to represent the sign of the number. It turns out that this is not a problem at all. See the examples presented in Table 16.4 to develop your intuition. The first group presents the doubling effect on positive numbers and the second group on negative numbers. In both cases, a 0 replaces the vacated bit. Why isn't shifting the sign bit out causing problems? The reason is that signed numbers are sign-extended to fit a larger-than-required number of bits. For example, if we want to represent numbers in the range of +3 and

Table 16.5 Division of signed numbers by 2

Signed binary number	Decimal value
01011000	+88
00101100	+44
00010110	+22
00001011	+11
10101000	−88
11010100	−44
11101010	−22
11110101	−11

−4, 3 bits are sufficient to represent this range. If we use a byte to represent the same range, the number is sign-extended by copying the sign bit into the higher order five bits, as shown below.

$$+3 = \overbrace{00000}^{\textit{sign bit copied}}\,011\text{B}$$

$$-3 = \overbrace{11111}^{\textit{sign bit copied}}\,101\text{B}$$

Clearly, doubling a signed number is no different than doubling an unsigned number. Thus, no special shift left instruction is needed for the signed numbers. In fact, `sal` and `shl` are one and the same instruction—`sal` is an alias for `shl`.

Halving Signed Numbers Can we also forget about treating the signed numbers differently in halving a number? Unfortunately, we cannot! When we right shift a signed number, the vacated left bit should be replaced by a copy of the sign bit. This rules out the use of `shr` for signed numbers. See the examples presented in Table 16.5. The `sar` instruction precisely does this—it copies the sign bit into the vacated bit on the left.

Remember that the shift right operation performs integer division. For example, right shifting 00001011B (+11D) by a bit results in 00000101B (+5D).

Why Use Shifts for Multiplication and Division?

Shifts are more efficient than the corresponding multiplication and division instructions. As an example, consider dividing an unsigned 16-bit number in the AX register by a power of 2 that is BX. Using the `div` instruction, we can write

```
; dividend is assumed to be in DX:AX
div     BX
```

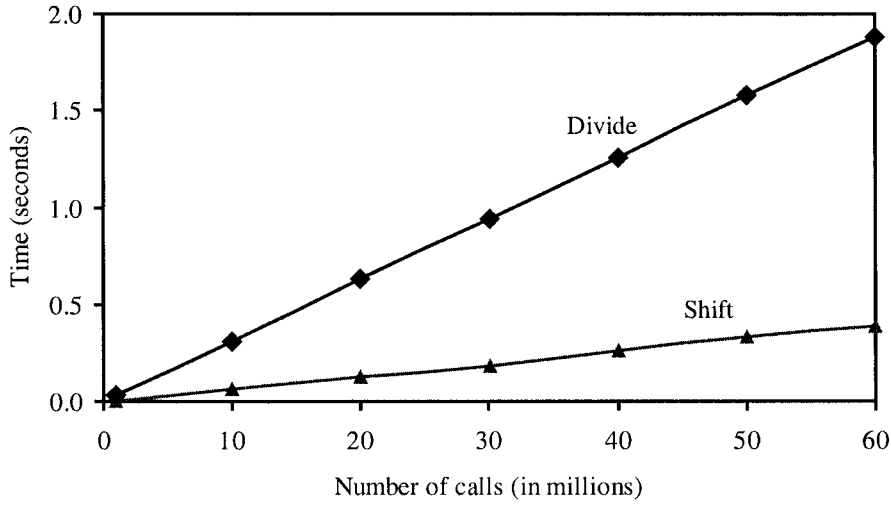

Figure 16.1 Execution time comparison of implementing division by a power of 2 using the shift and divide instructions.

Now let us look at how we can perform this multiplication with the `shr` instruction. If we place the bit shift count in the CL register, we can use this shift instruction to perform the division operation. In the following code

```
bsr     CX,BX
shr     AX,CL
```

the `bsr` instruction places this shift count in the CX register. We give details of this instruction on page 355.

Figure 16.1 shows the execution of these two versions on a 2.8 GHz Pentium 4 machine running the Red Hat Linux. The x-axis gives the number times (in millions) the division operation is performed. The y-axis gives the execution time in seconds. The "Shift" line is the execution time of the version that uses `shr` to perform the division 40000/1024. The corresponding execution time for the `div` version is shown by the "Divide" line. Clearly, the shift version is much more efficient than the divide version.

Doubleshift Instructions

The IA-32 instruction set also provides two doubleshift instructions for 32-bit and 64-bit shifts. These two instructions operate on either word or doubleword operands and produce a word or doubleword result, respectively. The doubleshift instructions require three operands, as shown below:

```
shld    dest,src,count   ; left shift
shrd    dest,src,count   ; right shift
```

`dest` and `src` can be either a word or a doubleword. While the `dest` operand can be in a register or memory, the `src` operand must be in a register. The shift `count` can be specified as in the shift instructions—either as an immediate value or in the CL register.

A significant difference between the shift and doubleshift instructions is that the `src` operand supplies the bits in doubleshift instructions, as shown below:

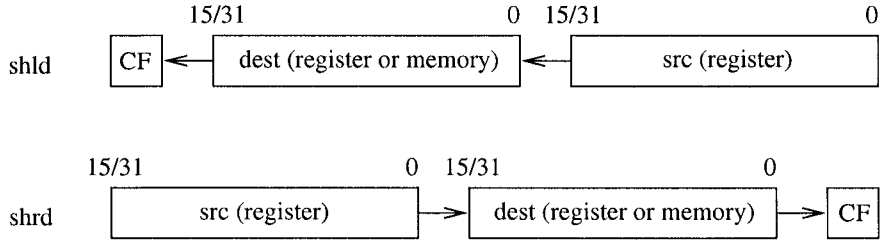

Note that the bits shifted out of the `src` operand go into the `dest` operand. However, the `src` operand itself is not modified by the doubleshift instructions. Only the `dest` operand is updated appropriately. As in the shift instructions, the last bit shifted out is stored in the carry flag. Later we present an example that demonstrates the use of the doubleshift instructions (see Example 16.8 on page 354).

Rotate Instructions

A drawback with the shift instructions is that the bits shifted out are lost. There are situations where we want to keep these bits. While the doubleshift instructions provide this capability on word and doubleword operands, the rotate instructions remedy this drawback for a variety of operands. These instructions can be divided into two types: rotate without involving the carry flag (CF), or rotate through the carry flag. Since we presented these two types of rotate instructions in Chapter 9, we discuss their typical usage next.

Rotate Without Carry

The rotate instructions are useful in rearranging bits of a byte, word, or doubleword. This is illustrated below by revisiting the data encryption example given on page 348.

Example 16.7 *Encryption example revisited.*
In Example 16.6, we encrypted a byte by interchanging the upper and lower nibbles. This can be done easily either by

```
mov     CL,4
ror     AL,CL
```

or by

```
mov     CL,4
rol     AL,CL
```

This is a much simpler solution than the one using shifts. □

Rotate Through Carry

The `rcl` and `rcr` instructions provide flexibility in bit rearranging. Furthermore, these are the only two instructions that take the carry flag bit as an input. This feature is useful in multiword shifts, as illustrated by the following example.

Example 16.8 *Shifting 64-bit numbers.*
We have seen that multiplication and division by a power of 2 is faster if we use shift operations rather than multiplication or division instructions. Shift instructions operate on operands of size up to 32 bits. What if the operand to be manipulated is bigger?

Since the shift instructions do not involve the carry flag as input, we have two alternatives: either use `rcl` or `rcr` instructions, or use the double shift instructions for such multiword shifts. As an example, assume that we want to multiply a 64-bit unsigned number by 16. The 64-bit number is assumed to be in the EDX:EAX register pair with EAX holding the least significant 32 bits.

Rotate version:

```
    mov     CX,4        ; 4 bit shift
shift_left:
    shl     EAX,1       ; moves leftmost bit of AX to CF
    rcl     EDX,1       ; CF goes to rightmost bit of DX
    loop    shift_left
```

Doubleshift version:

```
    shld    EDX,EAX,4 ; EAX is unaffected by shld
    shl     EAX,4
```

Similarly, if we want to divide the same number by 16, we can use the following code:

Rotate version:

```
    mov     CX,4        ; 4 bit shift
shift_right:
    shr     EDX,1       ; moves rightmost bit of DX to CF
    rcr     EAX,1       ; CF goes to leftmost bit of AX
    loop    shift_right
```

Doubleshift version:

```
    shrd    EAX,EDX,4 ; EDX is unaffected by shld
    shr     EDX,4
```

Clearly, the doubleshift instruction avoids the need for a loop. □

Bit Instructions

The IA-32 instruction set includes several bit test and modification instructions as well as bit scan instructions. This section discusses these two groups of instructions. The programming examples given later illustrate the use of these instructions.

Bit Test and Modify Instructions

There are four bit test instructions. Each instruction takes the position of the bit to be tested. The least significant bit is considered as bit position zero. A summary of the four instructions is given below:

Instruction	Effect on Selected Bit
bt (Bit Test)	No effect
bts (Bit Test and Set)	Selected bit← 1
btr (Bit Test and Reset)	Selected bit← 0
btc (Bit Test and Complement)	Selected bit← NOT(Selected bit)

All four instructions copy the selected bit into the carry flag. The format of all four instructions is the same. We use the `bt` instruction to illustrate the format of these instructions.

```
bt      operand,bit_pos
```

where `operand` can be a word or doubleword located either in a register or in memory. The `bit_pos` specifies the bit position to be tested. It can be specified as an immediate value or in a 16- or 32-bit register. Instructions in this group affect only the carry flag. The other five status flags are undefined following a bit test instruction.

Bit Scan Instructions

Bit scan instructions scan the operand for a 1 bit and return its bit position in a register. There are two instructions—one to scan forward and the other to scan backward. The format is

```
bsf     dest_reg,operand        ;bit scan forward
bsr     dest_reg,operand        ;bit scan reverse
```

where `operand` can be a word or doubleword located either in a register or in memory. The `dest_reg` receives the bit position. It must be a 16- or 32-bit register. The zero flag is set if all bits of `operand` are 0; otherwise, the ZF is cleared and the `dest_reg` is loaded with the bit position of the first 1 bit while scanning forward (for `bsf`), or reverse (for `bsr`). Like the bit test and modify instructions, these two instructions affect only the zero flag; the other five status flags are undefined.

Our First Program

As our first program, we look at how we can use the `sar` instruction to perform signed integer division. In this program, we divide a signed 32-bit integer by a power of 2. The program listing is given in Program 16.1. It requests two numbers from the user. The numerator can be a signed 32-bit integer. This is read using `GetLint` on line 20. The user is then prompted to enter the denominator. After validating the denominator, the program outputs the result of the division operation. After displaying the result, it queries whether the user wants to quit. Based on the response received, the program either terminates or repeats the process.

Program 16.1 Integer division using the shift instruction

```
;Division using shifts                    SAR_DIVIDE.ASM
;
;        Objective: To divide a 32-bit signed number
;                   by a power of 2 using SAR.
;            Input: Requests two numbers from the user.
;           Output: Prints the division result.
%include "io.mac"
.DATA
prompt1      db  'Please input numerator: ',0
prompt2      db  'Please input denominator: ',0
out_msg1     db  'The integer division result is: ',0
query_msg    db  'Do you want to quit (Y/N): ',0
error_msg    db  'Denominator is zero. ',
             db  'Enter a nonzero value: ',0

.CODE
     .STARTUP
read_input:
     PutStr  prompt1      ; request numerator
     GetLInt EAX
     PutStr  prompt2      ; request denominator
read_denom:
     GetLInt EBX
     bsr     ECX,EBX      ; ECX receives the position of
                          ; the leftmost 1 bit in EBX
     ; bsr clears ZF if there is at least 1 bit
     ; in denominator; ZF = 0 if all the bits are zero
     jnz     nonZero
     PutStr  error_msg    ; if denominator is zero,
     jmp     read_denom   ; read again
nonZero:
     sar     EAX,CL
     PutStr  out_msg1     ; output the result
     PutLInt EAX
     nwln
     PutStr  query_msg    ; query whether to terminate
     GetCh   AL
     cmp     AL,'Y'       ; if response is not 'Y'
     jne     read_input   ; repeat the loop
done:
         .EXIT
```

The division is done by the `sar` instruction. To do this, we need to find out the number bit positions the numerator needs to be shifted right. If we assume that the denominator is a power of 2, it will have a single 1 bit. We use `bsr` to find the position of this 1 bit. The instruction

```
bsr     ECX,EBX
```

scans the denominator in EBX from the most significant bit (i.e., it scans the value in EBX from left to right). The first 1 bit position is returned in the ECX register. If the denominator is zero, the `bsr` instruction sets the zero flag (ZF = 1). Otherwise, it is cleared. We use this condition to detect if the denominator is zero (line 28). If it is zero, an error message is displayed and the user is prompted for a nonzero value. If the denominator is not a power of 2, the most significant bit that has 1 is returned by the `bsr` instruction. For example, if the denominator is 10, it divides the numerator by 8.

Illustrative Examples

This section presents two examples that use the instructions introduced in this chapter.

Example 16.9 *Multiplication using only shifts and adds.*
The objective of this example is to show how multiplication can be done entirely by using the shift and add operations. We consider multiplication of two unsigned 8-bit numbers. In order to use the shift operation, we have to express the multiplier as a power of 2. For example, if the multiplier is 64, the result can be obtained by shifting the multiplicand left by six bit positions because $2^6 = 64$.

What if the multiplier is not a power of 2? In this case, we have to express this number as a sum of powers of 2. For example, if the multiplier is 10, it can be expressed as 8+2, where each term is a power of 2. Then the required multiplication can be done by two shifts and one addition.

The question now is: How do we express the multiplier in this form? If we look at the binary representation of the multiplicand (10D = 00001010B), there is a 1 in bit positions with weights 8 and 2. Thus, for each 1 bit in the multiplier, the multiplicand should be shifted left by a number of positions equal to the bit position number. In the above example, the multiplicand should be shifted left by 3 and 1 bit positions and then added. This procedure is formalized in the following algorithm:

```
mult8 (number1, number2)
    result = 0
    for (i = 7 downto 0)
        if (bit(number2, i) = 1)
            result = result + number1 * 2^i
        end if
    end for
end mult8
```

The function `bit` returns the ith bit of `number2`. The program listing is given in Program 16.2. The main program requests two numbers from the user and calls the procedure `mult8` and displays the result. As in the previous program, it queries the user whether to quit and proceeds according to the response.

Program 16.2 Multiplication of two 8-bit numbers using only shifts and adds

```
 1:  ;8-bit multiplication using shifts                SHL_MLT.ASM
 2:  ;
 3:  ;        Objective: To multiply two 8-bit unsigned numbers
 4:  ;                   using SHL rather than MUL instruction.
 5:  ;            Input: Requests two unsigned numbers.
 6:  ;           Output: Prints the multiplication result.
 7:  %include "io.mac"
 8:  .DATA
 9:  input_prompt   db  'Please input two short numbers: ',0
10:  out_msg1       db  'The multiplication result is: ',0
11:  query_msg      db  'Do you want to quit (Y/N): ',0
12:
13:  .CODE
14:      .STARTUP
15:  read_input:
16:      PutStr  input_prompt ; request two numbers
17:      GetInt  AX           ; AX = first number
18:      GetInt  BX           ; BX = second number
19:      call    mult8        ; mult8 leaves result in AX
20:      PutStr  out_msg1
21:      PutInt  AX
22:      nwln
23:      PutStr  query_msg    ; query whether to terminate
24:      GetCh   AL
25:      cmp     AL,'Y'       ; if the response is not 'Y'
26:      jne     read_input   ; repeat the loop
27:  done:
28:      .EXIT
29:
30:  ;-------------------------------------------------------
31:  ; mult8 multiplies two 8-bit unsigned numbers passed on
32:  ; to it in AL and BL. The 16-bit result is returned in AX.
33:  ; This procedure uses the SHL instruction to do the
34:  ; multiplication. All registers, except AX, are preserved.
35:  ;-------------------------------------------------------
36:  mult8:
37:      push    CX            ; save registers
38:      push    DX
39:      push    SI
40:      xor     DX,DX         ; DX = 0 (keeps mult. result)
41:      mov     CX,7          ; CX = # of shifts required
42:      mov     SI,AX         ; save original number in SI
43:  repeat1:       ; multiply loop - iterates 7 times
44:      rol     BL,1          ; test number2 bits from left
45:      jnc     skip1         ; if 0, do nothing
46:      mov     AX,SI         ; else, AX = number1*bit weight
47:      shl     AX,CL
48:      add     DX,AX         ; update running total in DX
49:  skip1:
50:      dec     CX
```

```
51:     jnz     repeat1
52:     rol     BL,1            ; test the rightmost bit of AL
53:     jnc     skip2           ; if 0, do nothing
54:     add     DX,SI           ; else, add number1
55: skip2:
56:     mov     AX,DX           ; move final result into AX
57:     pop     SI              ; restore registers
58:     pop     DX
59:     pop     CX
60:     ret
```

The `mult8` procedure multiplies two 8-bit unsigned numbers and returns the result in AX. It follows the algorithm discussed on page 357. The multiply loop (lines 43–51) tests the most significant 7 bits of the multiplier. The least significant bit is tested on lines 52 and 53. Notice that the procedure uses `rol` rather than `shl` to test each bit (lines 44 and 52). The use of `rol` automatically restores the BL register after 8 rotates. □

Example 16.10 *Multiplication using only shifts and adds—version 2.*
In this example, we rewrite the `mult8` procedure of the last example by using the bit test and scan instructions. In the previous version, we used a loop (see lines 43–50) to test each bit. Since we are interested only in 1 bits, we can use a bit scan instruction to do this job. The modified `mult8` procedure is shown below.

```
 1: ;-------------------------------------------------------
 2: ; mult8 multiplies two 8-bit unsigned numbers passed on
 3: ; to it in AL and BL. The 16-bit result is returned in AX.
 4: ; This procedure uses the SHL instruction to do the
 5: ; multiplication. All registers, except AX, are preserved.
 6: ; Demonstrates the use of bit instructions BSF and BTC.
 7: ;-------------------------------------------------------
 8: mult8:
 9:     push    CX              ; save registers
10:     push    DX
11:     push    SI
12:     xor     DX,DX           ; DX = 0 (keeps mult. result)
13:     mov     SI,AX           ; save original number in SI
14: repeat1:
15:     bsf     CX,BX           ; CX = first 1 bit position
16:     jz      skip1           ; if ZF=1, no 1 bit in B
17:     mov     AX,SI           ; else, AX = number1*bit weight
18:     shl     AX,CL
19:     add     DX,AX           ; update running total in DX
20:     btc     BX,CX           ; complement the bit found by BSF
21:     jmp     repeat1
22: skip1:
23:     mov     AX,DX           ; move final result into AX
24:     pop     SI              ; restore registers
25:     pop     DX
26:     pop     CX
27:     ret
```

The modified loop (lines 14–21) replaces the loop in the previous version. This code is more efficient because the number of times the loop iterates is equal to the number of 1's in BX. The previous version, on the other hand, always iterates seven times. Also note that we can replace the `btc` instruction on line 20 by a `btr` instruction. Similarly, the `bsf` instruction on line 15 can be replaced by a `brf` instruction. □

Summary

We discussed logical, shift, and rotate instructions available in the assembly language. Logical instructions are useful to implement bitwise logical operators and Boolean expressions. However, in some instances Boolean expressions can also be implemented by using conditional jump instructions without using the logical instructions.

Shift and rotate instructions provide flexibility to bit manipulation operations. There are two types of shift instructions: one works on logical and unsigned values, and the other is meant for signed values. There are also two types of rotate instructions: rotate without, or rotate through carry. Rotate through carry is useful in shifting multiword data.

The instruction set also provides two doubleshift instructions that work on either word or doubleword operands. In addition, four instructions for testing and modifying bits and two instructions to scan for a bit are available.

We discussed how the logical and shift instructions are used to implement logical expressions and bitwise logical operations in high-level languages. Shift instructions can be used to multiply or divide by a number that is a power of 2. We have demonstrated that the shift instructions for such arithmetic operations are much more efficient than the corresponding arithmetic instructions.

PART VI

Advanced Assembly Language

17

String Processing

String manipulation is an important aspect of any programming task. Strings are represented in a variety of ways. We start the chapter with a discussion of the two representation schemes used to store strings. The IA-32 instruction set supports string processing by a special set of instructions. We describe these instructions in detail. Several examples are presented to illustrate the use of string instructions in developing procedures for string processing. We also describe a program to test the procedures developed here. A novelty of this program is that it demonstrates the use of indirect procedure calls. Even though these instructions are called string instructions, they can be used for processing other types data. We demonstrate this aspect by means of an example. The chapter concludes with a summary.

String Representation

A string can be represented either as a *fixed-length* string or as a *variable-length* string. In the fixed-length representation, each string occupies exactly the same number of character positions. That is, each string has the same length, where the length of a string refers to the number of characters in the string. In this representation, if a string has fewer characters, it is extended by padding, for example, with blank characters. On the other hand, if a string has more characters, it is usually truncated to fit the storage space available.

Clearly, if we want to avoid truncation of larger strings, we need to fix the string length carefully so that it can accommodate the largest string that the program will ever handle. A potential problem with this representation is that we should anticipate this value, which may cause difficulties with program maintenance. A further disadvantage of using fixed-length representation is that memory space is wasted if majority of the strings are shorter than the length used.

The variable-length representation avoids these problems. In this scheme, a string can have as many characters as required (usually, within some system-imposed limit). Associated with each string, there is a string length attribute giving the number of characters in the string. This length attribute is given in one of two ways:

1. Explicitly storing string length, or
2. Using a sentinel character.

These two methods are discussed next.

Explicitly Storing String Length

In this method, string length attribute is explicitly stored along with the string, as shown in the following example:

```
string    DB    'Error message'
str_len   DW    $-string
```

where $ is the location counter symbol that represents the current value of the location counter. In this example, $ points to the byte after the last character of `string`. Therefore,

```
$-string
```

gives the length of the string. Of course, we could also write

```
string    DB    'Error message'
str_len   DW    13
```

However, if we modify the contents of `string` later, we have to update the string length value as well. On the other hand, by using `$-string`, we let the assembler do the job for us at assembly time.

Using a Sentinel Character

In this method, strings are stored with a trailing sentinel character to delimit a string. Therefore, there is no need to store the string length explicitly. The assumption here is that the sentinel character is a special character that does not appear within a string. We normally use a special, nonprintable character that does not appear in strings. We have been using the ASCII NULL-character (00H) to terminate strings. Such NULL-terminated strings are called *ASCIIZ strings*. Here are some examples:

```
string1    DB    'This is OK',0
string2    DB    'Price = $9.99',0
```

The C language, for example, uses this representation to store strings. In the remainder of this chapter, we use this representation for strings.

String Instructions

There are five main string-processing instructions. These can be used to copy a string, to compare two strings, and so on. It is important to note that these instructions are not just for the strings. We can use them for other types of data. For example, we could use them to copy arrays of doublewords, as we shall see later. The five basic instructions are shown in Table 17.1.

Specifying Operands

As indicated, each string instruction may require a source operand, a destination operand, or both. For 32-bit segments, string instructions use ESI and EDI registers to point to the source and destination operands, respectively. The source operand is assumed to be at DS:ESI in memory, and the destination operand at ES:EDI in memory. For 16-bit segments, SI and DI registers are used instead of ESI and EDI registers. If both the operands are in the same data segment, we can let both DS and ES point to the data segment to use the string instructions.

Table 17.1 String Instructions

Mnemonic	Meaning	Operand(s) required
LODS	LOaD String	source
STOS	STOre String	destination
MOVS	MOVe String	source & destination
CMPS	CoMPare Strings	source & destination
SCAS	SCAn String	destination

Variations

Each string instruction can operate on 8-, 16-, or 32-bit operands. As part of execution, string instructions automatically update (i.e., increment or decrement) the index register(s) used by them. For byte operands, source and destination index registers are updated by 1. These registers are updated by 2 and 4 for word and doubleword operands, respectively. In this chapter, we focus mostly on byte operand strings.

String instructions derive much of their power from the fact that they can accept a repetition prefix to repeatedly execute the operation. These prefixes are discussed next. The direction of string processing—forward or backward—is controlled by the direction flag (discussed later).

Repetition Prefixes

String instructions can be repeated by using a repetition prefix. As shown in Table 17.2, the three prefixes are divided into two categories: *unconditional* or *conditional* repetition. None of the flags is affected by these instructions.

Table 17.2 Repetition Prefixes

unconditional repeat	
rep	REPeat
conditional repeat	
repe/repz	REPeat while Equal REPeat while Zero
repne/repnz	REPeat while Not Equal REPeat while Not Zero

rep This is an unconditional repeat prefix and causes the instruction to repeat according to the value in the ECX register. Note that for 16-bit addresses, CX register is used. The semantics of the rep prefix are

```
while (ECX ≠ 0)
    execute the string instruction;
    ECX := ECX–1;
end while
```

The ECX register is first checked and if it is not 0, only then is the string instruction executed. Thus, if ECX is 0 to start with, the string instruction is not executed at all. This is in contrast to the `loop` instruction, which first decrements and then tests if ECX is 0. Thus, with `loop`, ECX = 0 results in a maximum number of iterations, and usually a `jecxz` check is needed.

repe/repz This is one of the two conditional repeat prefixes. Its operation is similar to that of `rep` except that the repetition is also conditional on the zero flag (ZF), as shown below:

```
while (ECX ≠ 0)
    execute the string instruction;
    ECX := ECX–1;
    if (ZF = 0)
    then
        exit loop
    end if
end while
```

The maximum number of times the string instruction is executed is determined by the contents of ECX, as in the `rep` prefix. But the actual number of times the instruction is repeated is determined by the status of ZF. Conditional repeat prefixes are useful with `cmps` and `scas` string instructions.

repne/repnz This prefix is similar to the `repe/repz` prefix except that the condition tested is ZF = 1 as shown below:

```
while (ECX ≠ 0)
    execute the string instruction;
    ECX := ECX–1;
    if (ZF = 1)
    then
        exit loop
    end if
end while
```

Direction Flag

The direction of string operations depends on the value of the direction flag. Recall that this is one of the bits of the flag's register (see Figure 4.4 on page 65). If the direction flag (DF) is clear (i.e., DF = 0), string operations proceed in the forward direction (from head to tail of a string); otherwise, string processing is done in the opposite direction.

Two instructions are available to explicitly manipulate the direction flag:

`std`	set direction flag (DF = 1)
`cld`	clear direction flag (DF = 0)

Both of these instructions do not require any operands. Each instruction is encoded using a single byte.

Usually, it does not matter whether a string is processed in the forward or backward direction. For sentinel character-terminated strings, forward direction is preferred. However, there are situations where one particular direction is mandatory. For example, if we want to shift a string right by one position, we have to start with the tail and proceed toward the head (i.e., move backward) as in the following example.

Initial string →	a	b	c	0	?
After one shift →	a	b	c	0	0
After two shifts →	a	b	c	c	0
After three shifts→	a	b	b	c	0
Final string →	a	a	b	c	0

String Move Instructions

There are three basic instructions in this group—`movs`, `lods`, and `stos`. Each instruction can take one of four forms. We start our discussion with the first instruction.

Move a String (movs) The format of the `movs` instruction is:

```
movs    dest_string,source_string
movsb
movsw
movsd
```

Using the first form, we can specify the source and destination strings. This specification will be sufficient to determine whether it is a byte, word, or doubleword operand. However, this form is not used frequently.

In the other three forms, the suffix `b`, `w`, or `d` is used to indicate byte, word, or doubleword operands. This format applies to all the string instructions of this chapter.

The `movs` instruction is used to copy a value (byte, word, or doubleword) from the source string to the destination string. As mentioned earlier, the source string value is pointed to by DS:ESI and the destination string location is indicated by ES:EDI in memory. After copying, the ESI and EDI registers are updated according to the value of the direction flag and the operand size. Thus, before executing the `movs` instruction, all four registers should be set up appropriately. (This is necessary even if you use the first format.) Note that our focus is on 32-bit segments. For 16-bit segments, we use the SI and DI registers.

```
movsb — move a byte string
    ES:EDI := (DS:ESI)      ; copy a byte
    if (DF = 0)             ; forward direction
    then
        ESI := ESI+1
        EDI := EDI+1
```

```
    else                    ; backward direction
        ESI := ESI–1
        EDI := EDI–1
    end if
Flags affected: none
```

For word and doubleword operands, the index registers are updated by 2 and 4, respectively. This instruction, along with the `rep` prefix, is useful to copy a string. More generally, we can use them to perform memory-to-memory block transfers. Here is an example that copies `string1` to `string2`.

```
.DATA
string1     db     'The original string',0
strLen      EQU    $-string1
.UDATA
string2     resb     80
.CODE
    .STARTUP
    mov     ECX,strLen      ; strLen includes NULL
    mov     ESI,string1
    mov     EDI,string2
    cld                     ; forward direction
    rep     movsb
```

Since the `movs` instruction does not change any of the flags, conditional repeat (`repe` or `repne`) should not be used with this instruction.

Load a String (lods) This instruction copies the value from the source string (pointed to by DS:ESI) in memory to AL (for byte operands—`lodsb`), AX (for word operands—`lodsw`), or EAX (for doubleword operands—`lodsd`).

```
lodsb — load a byte string
        AL := (DS:ESI)      ; copy a byte
        if (DF = 0)         ; forward direction
        then
            ESI := ESI+1
        else                ; backward direction
            ESI := ESI–1
        end if
Flags affected: none
```

Use of the `rep` prefix does not make sense, as it will leave only the last value in AL, AX, or EAX. This instruction, along with the `stos` instruction, is often used when processing is required while copying a string. This point is elaborated after we describe the `stos` instruction.

Store a String (stos) This instruction performs the complementary operation. It copies the value in AL (for `stosb`), AX (for `stosw`), or EAX (for `stosd`) to the destination string (pointed to by ES:EDI) in memory.

```
stosb — store a byte string
        ES:EDI := AL        ; copy a byte
        if (DF = 0)         ; forward direction
        then
            EDI := EDI+1
        else                ; backward direction
            EDI := EDI-1
        end if
Flags affected: none
```

We can use the `rep` prefix with the `stos` instruction if our intention is to initialize a block of memory with a specific character, word, or doubleword value. For example, the following code initializes `array1` with −1.

```
.UDATA
array1    resw    100
.CODE
    .STARTUP
    mov     ECX,100
    mov     EDI,array1
    mov     AX,-1
    cld                     ; forward direction
    rep     stosw
```

In general, the `rep` prefix is not useful with `lods` and `stos` instructions. These two instructions are often used in a loop to do value conversions while copying data. For example, if `string1` only contains letters and blanks, the following code

```
    mov     ECX,strLen
    mov     ESI,string1
    mov     EDI,string2
    cld                     ; forward direction
loop1:
    lodsb
    or      AL,20H
    stosb
    loop    loop1
done:
        . . .
```

can convert it to a lowercase string. Note that blank characters are not affected because 20H represents blank in ASCII, and the

```
or      AL,20H
```

instruction does not have any effect on it. The advantage of `lods` and `stos` is that they automatically increment ESI and EDI registers.

String Compare Instruction

The cmps instruction can be used to compare two strings.

```
cmpsb — compare two byte strings
        Compare the two bytes at DS:ESI and ES:EDI and set flags
        if (DF = 0)          ; forward direction
        then
            ESI := ESI+1
            EDI := EDI+1
        else                 ; backward direction
            ESI := ESI−1
            EDI := EDI−1
        end if
Flags affected: As per cmp instruction
```

The cmps instruction compares the two bytes, words, or doublewords at DS:ESI and ES:EDI and sets the flags just like the cmp instruction. Like the cmp instruction, cmps performs

```
(DS:ESI) − (ES:EDI)
```

and sets the flags according to the result. The result itself is not stored. We can use conditional jumps like ja, jg, jc, etc. to test the relationship of the two values. As usual, the ESI and EDI registers are updated according to the value of the direction flag and the operand size. The cmps instruction is typically used with the repe/repz or repne/repnz prefix.

The following code

```
.DATA
string1     db      'abcdfghi',0
strLen      EQU     $-string1
string2     db      'abcdefgh',0
.CODE
    .STARTUP
    mov     ECX,strLen
    mov     ESI,string1
    mov     EDI,string2
    cld                         ; forward direction
    repe    cmpsb
```

leaves ESI pointing to g in string1 and EDI to f in string2. Therefore, adding

```
    dec     ESI
    dec     EDI
```

leaves ESI and EDI pointing to the last character that differs. Then we can use, for example,

```
    ja      str1Above
```

to test if string1 is greater (in the collating sequence) than string2. This, of course, is true in this example. A more concrete example is given later (see the string comparison procedure on page 375).

The repne/repnz prefix can be used to continue comparison as long as the comparison fails and the loop terminates when a matching value is found. For example,

```
.DATA
string1     db     'abcdfghi',0
strLen      EQU    $-string1-1
string2     db     'abcdefgh',0
.CODE
    .STARTUP
    mov     ECX,strLen
    mov     ESI,string1 + strLen - 1
    mov     EDI,string2 + strLen - 1
    std                     ; backward direction
    repne   cmpsb
    inc     ESI
    inc     EDI
```

leaves ESI and EDI pointing to the first character that matches in the backward direction.

Scanning a String

The `scas` (scanning a string) instruction is useful in searching for a particular value or character in a string. The value should be in AL (for `scasb`), AX (for `scasw`), or EAX (for `scasd`), and ES:EDI should point to the string to be searched.

`scasb` — scan a byte string
Compare AL to the byte at ES:EDI and set flags
if (DF = 0) ; forward direction
then
EDI := EDI+1
else ; backward direction
EDI := EDI−1
end if
Flags affected: As per `cmp` instruction

Like with the `cmps` instruction, the `repe/repz` or `repne/repnz` prefix can be used.

```
.DATA
string1     db     'abcdefgh',0
strLen      EQU    $ - string1
.CODE
    .STARTUP
    mov     ECX,strLen
    mov     EDI,string1
    mov     AL,'e'          ; character to be searched
    cld                     ; forward direction
    repne   scasb
    dec     EDI
```

This program leaves the EDI register pointing to `e` in `string1`. The following example can be used to skip the initial blanks.

```
.DATA
string1     db     '       abc',0
strLen      EQU    $-string1
.CODE
```

```
.STARTUP
mov     ECX,strLen
mov     EDI,string1
mov     AL,' '          ; character to be searched
cld                     ; forward direction
repe    scasb
dec     EDI
```

This program leaves the EDI register pointing to the first nonblank character in `string1`, which is a in our example.

Our First Program

The string instructions we have discussed so far are not restricted to string operations only. For example, they can be used for general-purpose memory-to-memory copy operations. To demonstrate this aspect, we write a program to perform a memory-to-memory copy operation. In this program, we copy the contents of a doubleword array to another array. Of course, we can do this without the string instructions. Program 17.1 shows how this can be done using the string instructions.

Program 17.1 Memory-to-memory copy using the string instructions

```
 1:  ;Memory-to-memory copy                          MEM_COPY.ASM
 2:  ;
 3:  ;        Objective: To demonstrate memory-to-memory copy
 4:  ;                   using the string instructions.
 5:  ;            Input: None.
 6:  ;           Output: Outputs the copied array.
 7:
 8:  %include "io.mac"
 9:
10:  .DATA
11:  in_array       dd  10,20,30,40,50,60,70,80,90,100
12:  ARRAY_SIZE     EQU ($-in_array)/4
13:  out_msg        db  'The copied array is: ',0
14:
15:  .UDATA
16:  out_array      resd  ARRAY_SIZE
17:
18:  .CODE
19:          .STARTUP
20:          mov     ECX,ARRAY_SIZE    ; ECX = array size
21:          mov     ESI,in_array      ; ESI = in array pointer
22:          mov     EDI,out_array     ; EDI = out array pointer
23:          cld                       ; forward direction
24:          rep     movsd
25:
26:          PutStr  out_msg
27:          mov     ECX,ARRAY_SIZE
28:          mov     ESI,out_array
29:  repeat1:
```

```
30:         lodsd
31:         PutLInt EAX
32:         nwln
33:         loop    repeat1
34:         .EXIT
```

This program's structure follows the example we have seen in Chapter 13 (see Example 13 on page 281). The source array (`in_array`) is initialized with 10 values, each is a 32-bit value. The array size is determined on line 12 by using the predefined location counter symbol $. For a discussion of how the array size is computed, see Example 13 on page 281.

To copy the array, we store the array size in ECX (line 20) and the source and destination array pointers in ESI and EDI registers, respectively (lines 21 and 22). Once these registers are set up, we clear the direction flag using `cld` on line 23. Copying of the array is done using the `movsd` instruction along with the `rep` prefix on line 24.

In operating systems that use segmentation provided by the IA-32 architecture, we have to make sure that the ES segment register points to the data segment. This, for example, can be done by the following code:

```
mov     AX,DS
mov     ES,AX
```

We have to resort to an indirect means to copy the DS contents to ES as

```
mov     ES,DS
```

is not a valid instruction. Since the Linux operating system does not use the segmentation and initializes the DS and ES registers to the same value, we don't need this code in our programs.

To display the contents of the destination array (`out_array`), we use the `lodsd` instruction, which loads the value into the EAX register. This value is displayed using the `PutLInt` on line 31. We cannot use the `rep` prefix with the `lodsd` instruction as we need to display the value. Instead, we use a loop to display the array values.

Illustrative Examples

We now give some examples to illustrate the use of the string instructions discussed in this chapter. These procedures along with several others are available in the `string.asm` file. These procedures receive the parameters via the stack. The pointer to a string is received in `segment:offset` form. A string pointer is loaded into either DS and ESI or ES and EDI using the `lds` or `les` instructions, the details of which are discussed next.

LDS and LES Instructions The syntax of these instructions is

```
lds     register,source
les     register,source
```

where `register` is a 32-bit general-purpose register, and `source` is a pointer to a 48-bit memory operand. The instructions perform the following actions:

```
lds
     register := (source)
           DS := (source + 4)
les
     register := (source)
           ES := (source + 4)
```

The 32-bit value at `source` in memory is copied to `register` and the next 16-bit value (i.e., at `source+4`) is copied to the DS or ES register. Both instructions affect none of the flags. By specifying ESI as the register operand, `lds` can be conveniently used to set up a source string. Similarly, a destination string can be set up by specifying EDI with `les`. For completeness, you should note that `lfs`, `lgs`, and `lss` instructions are available to load the other segment registers.

Examples

We will next present two simple string processing procedures. These functions are available in high-level languages such as C. All procedures use the carry flag (CF) to report input error—*not a string*. This error results if the input passed is not a string whose length is less than the `STR_MAX` constant defined in `string.asm`. The carry flag is set (i.e., CF = 1) if there is an input error; otherwise, the carry flag is cleared.

The following constants are defined in `string.asm`:

```
STR_MAX     EQU        128
%define     STRING1    [EBP+8]
%define     STRING2    [EBP+16]
```

Example 17.1 *String length procedure to return the length of* `string1`.

String length is the number of characters in a string, excluding the NULL character. We use the `scasb` instruction and search for the NULL character. Since `scasb` works on the destination string, `les` is used to load the string pointer to the ES and EDI registers from the stack. `STR_MAX`, the maximum length of a string, is moved into ECX, and the NULL character (i.e., 0) is moved into the AL register. The direction flag is cleared to initiate a forward search. The string length is obtained by taking the difference between the end of the string (pointed to by EDI) and the start of the string available at [EBP+8]. The EAX register is used to return the string length value. This procedure is similar to the C function `strlen`.

```
;-----------------------------------------------------------
;String length procedure. Receives a string pointer
;(seg:offset) via the stack. If not a string, CF is set;
;otherwise, string length is returned in EAX with CF = 0.
;Preserves all registers.
;-----------------------------------------------------------
str_len:
    enter   0,0
    push    ECX
    push    EDI
    push    ES
    les     EDI,STRING1   ; copy string pointer to ES:EDI
    mov     ECX,STR_MAX   ; need to terminate loop if EDI
                          ; is not pointing to a string
    cld                   ; forward search
```

```
    mov     AL,0            ; NULL character
    repne   scasb
    jcxz    sl_no_string ; if ECX = 0, not a string
    dec     EDI             ; back up to point to NULL
    mov     EAX,EDI
    sub     EAX,[EBP+8]     ; string length in EAX
    clc                     ; no error
    jmp     SHORT sl_done
sl_no_string:
    stc                     ; carry set => no string
sl_done:
    pop     ES
    pop     EDI
    pop     ECX
    leave
    ret     8               ; clear stack and return
```

Example 17.2 *String compare procedure to compare two strings.*
This function uses the `cmpsb` instruction to compare two strings. It returns in EAX a negative value if `string1` is lexicographically less than `string2`, 0 if `string1` is equal to `string2`, and a positive value if `string1` is lexicographically greater than `string2`.

To implement this procedure, we have to find the first occurrence of a character mismatch between the corresponding characters in the two strings (when scanning strings from left to right). The relationship between the strings is the same as that between these two differing characters. When we include the NULL character in this comparison, this algorithm works correctly even when the two strings are of different length.

The `str_cmp` instruction finds the length of `string2` using the `str_len` procedure. It does not really matter whether we find the length of `string2` or `string1`. We use this value (plus one to include NULL) to control the number of times the `cmpsb` instruction is repeated. Conditional jump instructions are used to test the relationship between the differing characters to return an appropriate value in the EAX register. The corresponding function in C is `strcmp`, which can be invoked by `strcmp(sting1,string2)`. This function also returns the same values (negative, 0, or positive value) depending on the comparison.

```
;-----------------------------------------------------------
;String compare procedure. Receives two string pointers
;(seg:offset) via the stack - string1 and string2.
;If string2 is not a string, CF is set;
;otherwise, string1 and string2 are compared and returns a
;a value in EAX with CF = 0 as shown below:
;    EAX = negative value  if string1 < string2
;    EAX = zero            if string1 = string2
;    EAX = positive value  if string1 > string2
;Preserves all registers.
;-----------------------------------------------------------
str_cmp:
    enter   0,0
    push    ECX
    push    EDI
    push    ESI
```

```
        push    DS
        push    ES
        ; find string length first
        les     EDI,STRING2   ; string2 pointer
        push    ES
        push    EDI
        call    str_len
        jc      sm_no_string

        mov     ECX,EAX       ; string1 length in ECX
        inc     ECX           ; add 1 to include NULL
        lds     ESI,STRING1   ; string1 pointer
        cld                   ; forward search
        repe    cmpsb
        je      same
        ja      above
below:
        mov     EAX,-1        ; EAX = -1 => string1 < string2
        clc
        jmp     SHORT sm_done
same:
        xor     EAX,EAX       ; EAX = 0 => string match
        clc
        jmp     SHORT sm_done
above:
        mov     EAX,1         ; EAX = 1 => string1 > string2
        clc
        jmp     SHORT sm_done
sm_no_string:
        stc                   ; carry set => no string
sm_done:
        pop     ES
        pop     DS
        pop     ESI
        pop     EDI
        pop     ECX
        leave
        ret     16            ; clear and return
```

In addition to these two functions, several other string processing functions such as string copy and string concatenate are available in the `string.asm` file.

Testing String Procedures

Now let us turn our attention to testing the string procedures developed in the last section. A partial listing of this program is given in Program 17.2. The full program can be found in the `str_test.asm` file.

Our main interest in this section is to show how using an indirect procedure call would substantially simplify calling the appropriate procedure according to the user request. Let us first look at the *indirect call* instruction for 32-bit segments.

Program 17.2 Part of string test program `str_test.asm`

```
            . . .
            . . .
.DATA
proc_ptr_table  dd  str_len_fun,str_cpy_fun,str_cat_fun
                dd  str_cmp_fun,str_chr_fun,str_cnv_fun
MAX_FUNCTIONS   EQU ($ - proc_ptr_table)/4

choice_prompt   db  'You can test several functions.',CR,LF
                db  '    To test       enter',CR,LF
                db  'String length       1',CR,LF
                db  'String copy         2',CR,LF
                db  'String concatenate  3',CR,LF
                db  'String compare      4',CR,LF
                db  'Locate character    5',CR,LF
                db  'Convert string      6',CR,LF
                db  'Invalid response terminates program.',CR,LF
                db  'Please enter your choice: ',0
            . . .
            . . .
.UDATA
string1         resb  STR_MAX
string2         resb  STR_MAX

.CODE
            . . .
            . . .
        .STARTUP
query_choice:
        xor     EBX,EBX
        PutStr  choice_prompt     ; display menu
        GetCh   BL                ; read response
        sub     BL,'1'
        cmp     BL,0
        jb      invalid_response
        cmp     BL,MAX_FUNCTIONS
        jb      response_ok
invalid_response:
        PutStr  invalid_choice
        nwln
        jmp     SHORT done
response_ok:
        shl     EBX,2                ; multiply EBX by 4
        call    [proc_ptr_table+EBX]; indirect call
        jmp     query_choice
done:
        .EXIT
            . . .
            . . .
```

Indirect Procedure Call

In our discussions so far, we have been using only the direct procedure calls, where the offset of the target procedure is provided directly. Recall that, even though we write only the procedure name, the assembler generates the appropriate offset value at the assembly time.

In indirect procedure calls, this offset is given with one level of indirection. That is, the call instruction contains either a memory word address (through a label) or a 32-bit general-purpose register. The actual offset of the target procedure is obtained from the memory word or the register referenced in the call instruction. For example, we could use

```
call    EBX
```

if EBX contains the offset of the target procedure. As part of executing this `call` instruction, the contents of the EBX register are used to load EIP to transfer control to the target procedure. Similarly, we can use

```
call    [target_proc_ptr]
```

if the memory at `target_proc_ptr` contains the offset of the target procedure. As we have seen in Chapter 15, the `jmp` is another instruction that can be used for indirect jumps in exactly the same way as the indirect `call`.

Back to the Example We maintain a procedure pointer table `proc_ptr_table` to facilitate calling the appropriate procedure. The user query response is used as an index into this table to get the target procedure offset. The EBX register is used as the index into this table. The instruction

```
call    [proc_ptr_table+EBX]
```

causes the indirect procedure call. The rest of the program is straightforward to follow.

Summary

We started this chapter with a brief discussion of various string representation schemes. Strings can be represented as either fixed-length or variable-length. Each representation has advantages and disadvantages. Variable-length strings can be stored either by explicitly storing the string length or by using a sentinel character to terminate the string. High-level programming languages like C use the NULL-terminated storage representation for strings. We have also used the same representation to store strings.

There are five basic string instructions—`movs`, `lods`, `stos`, `cmps`, and `scas`. Each of these instructions can work on byte, word, or doubleword operands. These instructions do not require the specification of any operands. Instead, the required operands are assumed to be at DS:ESI and/or ES:EDI for 32-bit segments. For 16-bit segments, SI and DI registers are used instead of the ESI and EDI registers, respectively. In addition, the direction flag is used to control the direction of string processing (forward or backward). Efficient code can be generated by combining string instructions with the repeat prefixes. Three repeat prefixes—`rep`, `repe/repz`, and `repne/repnz`—are provided.

We also demonstrated, by means of an example, how indirect procedure calls can be used. Indirect procedure calls give us a powerful mechanism by which, for example, we can pass a procedure to be executed as an argument using the standard parameter passing mechanisms.

18

ASCII and BCD Arithmetic

In the previous chapters, we used the binary representation and discussed several instructions that operate on binary data. In this chapter, we present two alternative representations—ASCII and BCD—that avoid or reduce the conversion overhead. We start this chapter with a brief introduction to these two representations. The next two sections discuss how arithmetic operations can be done in these two representations.

While the ASCII and BCD representations avoid/reduce the conversion overhead, processing numbers in these two representations is slower than in the binary representation. This inherent tradeoff between conversion overhead and processing overhead among the three representations is explored toward the end of the chapter. The chapter ends with a summary.

Introduction

We normally represent the numeric data in the binary system. We have discussed several arithmetic instructions that operate on such data. The binary representation is used internally for manipulation (e.g., arithmetic and logical operations).

When numbers are entered from the keyboard or displayed, they are in the ASCII form. Thus, it is necessary to convert numbers from ASCII to binary at the input end; we have to convert from binary to ASCII to output results as shown below:

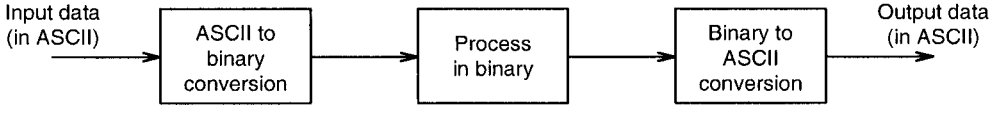

We used `GetInt/GetLint` and `PutInt/PutLint` to perform these two conversions, respectively. These conversions represent an overhead, but we can process numbers much more efficiently in the binary form.

In some applications where processing of numbers is quite simple (for example, a single addition), the overhead associated with the two conversions might not be justified. In this case, it is probably more efficient to process numbers in the decimal form.

Another reason for processing numbers in decimal form is that we can use as many digits as necessary, and we can control rounding-off errors. This is important when representing dollars and cents for financial records.

Decimal numbers can be represented in one of two forms: ASCII or binary-coded-decimal (BCD). These two representations are discussed next.

ASCII Representation

In this representation, numbers are stored as strings of ASCII characters. For example, 1234 is represented as

31 32 33 34H

where 31H is the ASCII code for 1, 32H for 2, etc. As you can see, arithmetic on decimal numbers represented in the ASCII form requires special care. There are two instructions to handle these numbers:

`aaa` — ASCII adjust after addition
`aas` — ASCII adjust after subtraction

We discuss these two instructions after introducing the BCD representation.

BCD Representation

There are two types of BCD representation: unpacked BCD and packed BCD. In the unpacked BCD representation, each digit is stored in a byte, while two digits are packed into a byte in the packed representation.

Unpacked BCD This representation is similar to the ASCII representation except that each byte stores the binary equivalent of a decimal digit. Note that the ASCII codes for digits 0 through 9 are 30H through 39H. Thus, if we mask off the upper four bits, we get the unpacked BCD representation. For example, 1234 is stored in this representation as

01 02 03 04H

We deal with only positive numbers in this chapter. Thus, there is no need to represent the sign. But if a sign representation is needed, an additional byte can be used for the sign. The number is positive if this byte is 00H and negative if 80H.

There are two instructions to handle these numbers:

`aam` — ASCII adjust after multiplication
`aad` — ASCII adjust before division

Since this representation is similar to the ASCII representation, the four instructions—`aaa`, `aas`, `aam`, and `aad`—can be used with the ASCII and unpacked BCD representations.

Packed BCD In the last two representations, each digit of a decimal number is stored in a byte. The upper four bits of each byte contain redundant information. In packed BCD representation, each digit is stored using only four bits. Thus, two decimal digits can be packed into a byte. This reduces the memory requirement by half compared to the other two representations. For example, the decimal number 1234 is stored in the packed BCD representation as

12 34H

which requires only two bytes as opposed to four in the other two representations. There are only two instructions that support addition and subtraction of packed BCD numbers:

`daa` — decimal adjust after addition
`das` — decimal adjust after subtraction

There is no support for multiplication or division operations. These two instructions are discussed later.

Processing in ASCII Representation

As mentioned before, four instructions are available to process numbers in the ASCII representation:

`aaa` — ASCII adjust after addition
`aas` — ASCII adjust after subtraction
`aam` — ASCII adjust after multiplication
`aad` — ASCII adjust before division

These instructions do not take any operands. They assume that the required operand is in the AL register.

ASCII Addition

To understand the need for the `aaa` instruction, look at the next two examples.

Example 18.1 *An ASCII addition example.*
Consider adding two ASCII numbers 4 (34H) and 5 (35H).

```
34H = 00110100B
35H = 00110101B
------------------
69H = 01101001B
```

The sum 69H is not correct. The correct value should be 09H in unpacked BCD representation. In this example, we get the right answer by setting the upper four bits to 0. This scheme, however, does not work in cases where the result digit is greater than 9, as shown in the next example. □

Example 18.2 *Another ASCII addition example.*
In this example, consider the addition of two ASCII numbers, 6 (36H) and 7 (37H).

```
36H = 00110110B
37H = 00110111B
------------------
6DH = 01101101B
```

Again, the sum 6DH is incorrect. We would expect the sum to be 13 (01 03H). In this case, ignore 6 as in the last example. But we have to add 6 to D to get 13. We add 6 because that is the difference between the bases of hex and decimal number systems. □

The `aaa` instruction performs these adjustments. This instruction is used after performing an addition operation by using either an `add` or `adc` instruction. The resulting sum in AL is adjusted to unpacked BCD representation. The `aaa` instruction works as follows.

1. If the least significant four bits of AL are greater than 9 or if the auxiliary flag is set, it adds 6 to AL and 1 to AH. Both CF and AF are set.
2. In all cases, the most significant four bits of AL are cleared (i.e., zeroed).

Here is an example that illustrates the use of the `aaa` instruction.

Example 18.3 *A typical use of the* `aaa` *instruction.*

```
sub     AH,AH     ; clear AH
mov     AL,'6'    ; AL = 36H
add     AL,'7'    ; AL = 36H+37H = 6DH
aaa               ; AX = 0103H
or      AL,30H    ; AL = 33H
```

To convert the result in AL to an ASCII result, we have to insert 3 into the upper four bits of the AL register. □

To add multidigit decimal numbers, we have to use a loop that adds one digit at a time starting from the rightmost digit. Program 18.1 shows how the addition of two 10-digit decimal numbers is done in ASCII representation.

ASCII Subtraction

The `aas` instruction is used to adjust the result of a subtraction operation (`sub` or `sbb`) and works like `aaa`. The actions taken by `aas` are

1. If the least significant four bits of AL are greater than 9 or if the auxiliary flag is set, it subtracts 6 from AL and 1 from AH. Both CF and AF are set.
2. In all cases, the most significant four bits of AL are cleared (i.e., zeroed).

It is straightforward to see that the adjustment is needed only when the result is negative, as shown in the following examples.

Example 18.4 *ASCII subtraction (positive result).*

```
sub     AH,AH     ; clear AH
mov     AL,'9'    ; AL = 39H
sub     AL,'3'    ; AL = 39H-33H = 6H
aas               ; AX = 0006H
or      AL,30H    ; AL = 36H
```

Notice that the `aas` instruction does not change the contents of the AL register, as the result is a positive number. □

Example 18.5 *ASCII subtraction (negative result).*

```
sub     AH,AH     ; clear AH
mov     AL,'3'    ; AL = 33H
sub     AL,'9'    ; AL = 33H-39H = FAH
aas               ; AX = FF04H
or      AL,30H    ; AL = 34H
```

The AL result indicates the magnitude; the `aas` instruction sets the carry flag to indicate that a borrow has been generated. □

Is the last result, FF04H, generated by `aas` useful? It is when you consider multidigit subtraction. For example, if we are subtracting 29 from 53 (i.e., 53−29), the first loop iteration performs 3−9 as in the last example. This gives us the result 4 in AL and the carry flag is set. Next we perform 5−2 using `sbb` to include the borrow generated by the previous subtraction. This leaves 2 as the result. After ORing with 30H, we will have 32 34H, which is the correct answer (24).

ASCII Multiplication

The `aam` instruction is used to adjust the result of a `mul` instruction. Unlike addition and subtraction, multiplication should not be performed on ASCII numbers but on unpacked BCD numbers. The `aam` works as follows: AL is divided by 10 and the quotient is stored in AH and the remainder in AL.

Example 18.6 *ASCII multiplication.*

```
mov     AL,3      ; multiplier in unpacked BCD form
mov     BL,9      ; multiplicand in unpacked BCD form
mul     BL        ; result 001BH is in AX
aam               ; AX = 0207H
or      AX,3030H  ; AX = 3237H
```

Notice that the multiplication should be done using unpacked BCD numbers—not on ASCII numbers! If the digits in AL and BL are in ASCII as in the following code, we have to mask off the upper four bits.

```
mov     AL,'3'    ; multiplier in ASCII
mov     BL,'9'    ; multiplicand in ASCII
and     AL,0FH    ; multiplier in unpacked BCD form
and     BL,0FH    ; multiplicand in unpacked BCD form
mul     BL        ; result 001BH is in AX
aam               ; AX = 0207H
or      AL,30H    ; AL = 37H
```

The `aam` instruction works only with the `mul` instruction, not with the `imul` instruction. □

ASCII Division

The `aad` instruction adjusts the numerator in AX *before* dividing two unpacked decimal numbers. The denominator has to be a single byte unpacked decimal number. The `aad` instruction multiplies AH by 10 and adds it to AL and sets AH to zero. For example, if AX = 0207H before `aad`, AX changes to 001BH after executing `aad`. As you can see from the last example, `aad` reverses the operation of `aam`.

Example 18.7 *ASCII division.*
Consider dividing 27 by 5.

```
mov     AX,0207H ; dividend in unpacked BCD form
mov     BL,05H   ; divisor in unpacked BCD form
aad              ; AX = 001BH
div     BL       ; AX = 0205H
```

The `aad` instruction converts the unpacked BCD number in AX to the binary form so that `div` can be used. The `div` instruction leaves the quotient (05H) in the AL register and the remainder (02H) in the AH register. □

Our First Program

As our first example of the chapter, let us see how we can perform multidigit ASCII addition. Addition of multidigit numbers in the ASCII representation is done one digit at a time starting with the rightmost digit. To illustrate the process involved, we discuss how addition of two 10-digit numbers is done (see the program listing below).

Program 18.1 ASCII addition of two 10-digit numbers

```
 1:  ;Addition of two integers in ASCII form   ASCIIADD.ASM
 2:  ;
 3:  ;        Objective: To demonstrate addition of two integers
 4:  ;                   in the ASCII representation.
 5:  ;            Input: None.
 6:  ;           Output: Displays the sum.
 7:  %include "io.mac"
 8:
 9:  .DATA
10:  sum_msg   db  'The sum is: ',0
11:  number1   db  '1234567890'
12:  number2   db  '1098765432'
13:  sum       db  '          ',0 ; add NULL char. to use PutStr
14:
15:  .CODE
16:        .STARTUP
17:        ; ESI is used as index into number1, number2, and sum
18:        mov     ESI,9          ; ESI points to rightmost digit
19:        mov     ECX,10         ; iteration count (# of digits)
20:        clc                    ; clear carry (we use ADC not ADD)
21:  add_loop:
22:        mov     AL,[number1+ESI]
23:        adc     AL,[number2+ESI]
24:        aaa                    ; ASCII adjust
25:        pushf                  ; save flags because OR
26:        or      AL,30H         ;  changes CF that we need
27:        popf                   ;  in the next iteration
28:        mov     [sum+ESI],AL   ; store the sum byte
29:        dec     ESI            ; update ESI
```

```
30:         loop    add_loop
31:         PutStr  sum_msg         ; display sum
32:         PutStr  sum
33:         nwln
34:         .EXIT
```

The program adds two numbers `number1` and `number2` and displays the sum. We use ESI as an index into the input numbers, which are in the ASCII representation. The ESI register is initialized to point to the rightmost digit (line 18). The loop count 10 is set up in ECX (line 19). The addition loop (lines 21–30) adds one digit by taking any carry generated during the previous iteration into account. This is done by using the `adc` rather than the `add` instruction. Since the `adc` instruction is used, we have to make sure that the carry is clear initially. This is done on line 20 using the `clc` (clear carry) instruction.

Note that the `aaa` instruction produces the result in unpacked BCD form. To convert to the ASCII form, we have to `or` the result with 30H (line 26). This ORing, however, destroys the carry generated by the `adc` instruction that we need in the next iteration. Therefore, it is necessary to save (line 25) and restore (line 27) the flags.

The overhead in performing the addition is obvious. If the input numbers were in binary, only a single `add` instruction would have performed the required addition. This conversion-overhead versus processing-overhead tradeoff is discussed later.

Processing Packed BCD Numbers

In this representation, as indicated earlier, two decimal numbers are packed into a byte. There are two instructions to process packed BCD numbers:

`daa` — Decimal adjust after addition
`das` — Decimal adjust after subtraction

There is no support for multiplication or division. For these operations, we will have to unpack the numbers, perform the operation, and repack them.

Packed BCD Addition

The `daa` instruction can be used to adjust the result of an addition operation to conform to the packed BCD representation. To understand the sort of adjustments required, let us look at some examples next.

Example 18.8 *A packed BCD addition example.*
Consider adding two packed BCD numbers 29 and 69.

```
29H = 00101001B
69H = 01101001B
92H = 10010010B
```

The sum 92 is not the correct value. The result should be 98. We get the correct answer by adding 6 to 92. We add 6 because the carry generated from bit 3 (i.e., auxiliary carry) represents an overflow above 16, not 10, as is required in BCD. □

Example 18.9 *Another packed BCD addition example.*
Consider adding two packed BCD numbers 27 and 34.

```
27H = 00100111B
34H = 00110100B
-----------------
5BH = 01011011B
```

Again, the result is incorrect. The sum should be 61. The result 5B requires correction, as the first digit is greater than 9. To correct the result add 6, which gives us 61. □

Example 18.10 *A final packed BCD addition example.*
Consider adding two packed BCD numbers 52 and 61.

```
52H = 01010010B
61H = 01100001B
-----------------
B3H = 10110011B
```

This result also requires correction. The first digit is correct, but the second digit requires a correction. The solution is the same as that used in the last example—add 6 to the second digit (i.e., add 60H to the result). This gives us 13 as the result with a carry (effectively equal to 113). □

The `daa` instruction exactly performs adjustments like these to the result of `add` or `adc` instructions. More specifically, the following actions are taken by `daa`:

- If the least significant four bits of AL are greater than 9 or if the auxiliary flag is set, it adds 6 to AL and sets AF;
- If the most significant four bits of AL are greater than 9 or if the carry flag is set, it adds 60H to AL and sets CF.

Example 18.11 *Code for packed BCD addition.*
Consider adding two packed BCD numbers 71 and 43.

```
mov     AL,71H
add     AL,43H      ; AL = B4H
daa                 ; AL = 14H and CF = 1
```

As indicated, the `daa` instruction restores the result in AL to the packed BCD representation. The result including the carry (i.e., 114H) is the correct answer in packed BCD. □

As in the ASCII addition, multibyte BCD addition requires a loop. After discussing the packed BCD subtraction, we present an example to add two 10-byte packed BCD numbers.

Packed BCD Subtraction

The `das` instruction can be used to adjust the result of a subtraction (i.e., the result of `sub` or `sbb`). It works similar to `daa` and performs the following actions:

- If the least significant four bits of AL are greater than 9 or if the auxiliary flag is set, it subtracts 6 from AL and sets AF;

- If the most significant four bits of AL are greater than 9 or if the carry flag is set, it subtracts 60H from AL and sets CF.

Here is an example that illustrates the use of the `das` instruction.

Example 18.12 *Code for packed BCD subtraction.*
Consider subtracting 43 from 71 (i.e., 71 − 43).

```
mov     AL,71H
sub     AL,43H      ; AL = 2EH
das                 ; AL = 28H
```

The `das` instruction restores the result in AL to the packed BCD representation. □

Illustrative Example

In this example, we consider multibyte packed BCD addition. As in the ASCII representation, when adding two multibyte packed BCD numbers, we have to use a loop that adds a pair of decimal digits in each iteration, starting from the rightmost pair. The program, given below, adds two 10-byte packed BCD numbers, `number1` and `number2`.

Program 18.2 Packed BCD addition of two 10-digit numbers

```
 1:  ;Addition of integers in packed BCD form   BCDADD.ASM
 2:  ;
 3:  ;        Objective: To demonstrate addition of two integers
 4:  ;                   in the packed BCD representation.
 5:  ;            Input: None.
 6:  ;           Output: Displays the sum.
 7:
 8:  %define SUM_LENGTH    10
 9:
10:  %include "io.mac"
11:
12:  .DATA
13:  sum_msg    db  'The sum is: ',0
14:  number1    db  12H,34H,56H,78H,90H
15:  number2    db  10H,98H,76H,54H,32H
16:  ASCIIsum   db  '          ',0     ; add NULL char.
17:
18:  .UDATA
19:  BCDsum     resb   5
20:
21:  .CODE
22:        .STARTUP
23:        mov     ESI,4
24:        mov     ECX,5               ; loop iteration count
25:        clc                         ; clear carry (we use ADC)
26:  add_loop:
27:        mov     AL,[number1+ESI]
```

```
28:         adc     AL,[number2+ESI]
29:         daa                             ; ASCII adjust
30:         mov     [BCDsum+ESI],AL         ; store the sum byte
31:         dec     ESI                     ; update index
32:         loop    add_loop
33:         call    ASCII_convert
34:         PutStr  sum_msg                 ; display sum
35:         PutStr  ASCIIsum
36:   nwln
37:         .EXIT
38:
39:   ;-------------------------------------------------------
40:   ; Converts the packed decimal number (5 digits) in BCDsum
41:   ; to ASCII represenation and stores it in ASCIIsum.
42:   ; All registers are preserved.
43:   ;-------------------------------------------------------
44:   ASCII_convert:
45:         pushad                          ; save registers
46:         ; ESI is used as index into ASCIIsum
47:         mov     ESI,SUM_LENGTH-1
48:         ; EDI is used as index into BCDsum
49:         mov     EDI,4
50:         mov     ECX,5                   ; loop count (# of BCD digits)
51:   cnv_loop:
52:         mov     AL,[BCDsum+EDI]         ; AL = BCD digit
53:         mov     AH,AL                   ; save the BCD digit
54:         ; convert right digit to ASCII & store in ASCIIsum
55:         and     AL,0FH
56:         or      AL,30H
57:         mov     [ASCIIsum+ESI],AL
58:         dec     ESI
59:         mov     AL,AH                   ; restore the BCD digit
60:         ; convert left digit to ASCII & store in ASCIIsum
61:         shr     AL,4                    ; right-shift by 4 positions
62:         or      AL,30H
63:         mov     [ASCIIsum+ESI],AL
64:         dec     ESI
65:         dec     EDI                     ; update EDI
66:         loop    cnv_loop
67:         popad                           ; restore registers
68:         ret
```

The two numbers to be added are initialized on lines 14 and 15. The space for the sum (`BCDsum`) is reserved using `resb` on line 19.

The code is similar to that given in Program 18.1. However, since we add two decimal digits during each loop iteration, only five iterations are needed to add the 10-digit numbers. Thus, processing numbers in the packed BCD representation is faster than in the ASCII representation. In any case, both representations are considerably slower in processing numbers than the binary representation.

Table 18.1 Tradeoffs associated with the three representations

Representation	Storage overhead	Conversion overhead	Processing overhead
Binary	Nil	High	Nil
Packed BCD	Medium	Medium	Medium
ASCII	High	Nil	High

At the end of the loop, the sum is stored in `BCDsum` as a packed BCD number. To display this number, we have to convert it to the ASCII form (an overhead that is not present in the ASCII version).

The procedure `ASCII_convert` takes `BCDsum` and converts it to equivalent ASCII string and stores it in `ASCIIsum`. For each byte read from `BCDsum`, two ASCII digits are generated. Note that the conversion from packed BCD to ASCII can be done by using only logical and shift operations. On the other hand, conversion from binary to ASCII requires a more expensive division operation (thus increasing the conversion overhead).

Decimal Versus Binary Arithmetic

Now you know three representations to perform arithmetic operations: binary, ASCII, and BCD. The majority of operations are done in binary. However, there are tradeoffs associated with these three representations.

First we will look at the storage overhead. The binary representation is compact and the most efficient one. The ASCII and unpacked BCD representations incur high overhead as each decimal digit is stored in a byte (see Table 18.1). The packed BCD representation, which stores two decimal digits per byte, reduces this overhead by approximately half. For example, using two bytes, we can represent numbers from 0 to 65,535 in the binary representation and from 0 to 9999 in the packed BCD representation, but only from 0 to 99 in the ASCII and unpacked BCD representations.

In applications where the input data is in ASCII form and the output is required to be in ASCII, binary arithmetic may not always be the best choice. This is because there are overheads associated with the conversion between ASCII and binary representations. However, processing numbers in binary can be done much more efficiently than in either ASCII or BCD representations. Table 18.1 shows the tradeoffs associated with these three representations.

When the input and output use the ASCII form and there is little processing, processing numbers in ASCII is better. This is so because ASCII version does not incur any conversion overhead. On the other hand, due to high overhead in converting numbers between ASCII and binary, the binary version takes more time than the ASCII version. The BCD version also takes substantially more time than the ASCII version but performs better than the binary version mainly because conversions between BCD and ASCII are simpler.

When there is significant processing of numbers, the binary version tends to perform better than the ASCII and BCD versions. In this scenario, the ASCII version provides the worst performance as its processing overhead is high (see Table 18.1). The BCD version, while slower than the binary version, performs much better than the ASCII version.

The moral of the story is that a careful analysis of the application should be done before deciding on the choice of representation for numbers in some applications. This is particularly true for business applications, where the data might come in the ASCII form.

Summary

In previous chapters we converted decimal data into binary for storing internally as well as for manipulation. This chapter introduced two alternative representations for storing the decimal data—ASCII and BCD. The BCD representation can be either unpacked or packed.

In the ASCII and unpacked BCD representations, one decimal digit is stored per byte, whereas the packed BCD representation stores two digits per byte. Thus, the storage overhead is substantial in ASCII and unpacked BCD. Packed BCD representation uses the storage space more efficiently (typically requiring half as much space). The binary representation, on the other hand, does not introduce any overhead.

There are two main overheads that affect the execution time of a program: conversion overhead and processing overhead. When the ASCII form is used for data input and output, the data should be converted between ASCII and binary/BCD. This conversion overhead for the binary representation can be substantial, as multiplication and division are required. There is much less overhead for the BCD representations, as only logical and shift operations are needed. On the other hand, number processing in binary is much faster than in ASCII or BCD representations. Packed BCD representation is better than ASCII representation, as each byte stores two decimal digits.

19

Recursion

We can use recursion as an alternative to iteration. This chapter first introduces the basics of recursion. After that we give some examples to illustrate how recursive procedures are written in the assembly language. The advantages and pitfalls associated with a recursive solution as opposed to an iterative solution are discussed toward the end of the chapter. The last section gives a summary.

Introduction

A recursive procedure calls itself, either directly or indirectly. In direct recursion, a procedure calls itself directly. In indirect recursion, procedure P makes a call to procedure Q, which in turn calls procedure P. The sequence of calls could be longer before a call is made to procedure P.

Recursion is a powerful tool that allows us to express our solution elegantly. Some solutions can be naturally expressed using recursion. Computing a factorial is a classic example. Factorial n, denoted $n!$, is the product of positive integers from 1 to n. For example,

$$5! = 1 \times 2 \times 3 \times 4 \times 5.$$

The factorial can be formally defined as

$$\begin{aligned} &\text{factorial}(0) = 1 \\ &\text{factorial}(n) = n * \text{factorial}(n-1) \text{ for } n > 0. \end{aligned}$$

Recursion shows up in this definition as we define factorial(n) in terms of factorial($n-1$). Every recursive function should have a termination condition to end the recursion. In this example, when $n = 0$, recursion stops. How do we express such recursive functions in programming languages? Let us first look at how this function is written in C:

```
int fact(int n)
{
    if (n == 0)
        return(1);
    return(n * fact(n-1));
}
```

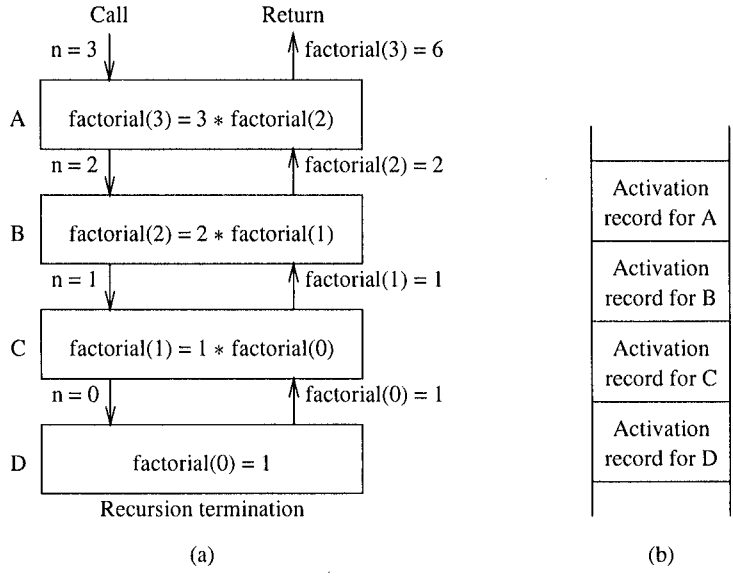

Figure 19.1 Recursive computation of factorial(3).

This is an example of direct recursion. How is this function implemented? At the conceptual level, its implementation is not any different from implementing other procedures. Once you understand that each procedure call instance is distinct from the others, the fact that a recursive procedure calls itself does not make a big difference.

Each active procedure maintains an activation record, which is stored on the stack. The activation record, as explained on page 256, consists of the arguments, return address, and local variables. The activation record comes into existence when a procedure is invoked and disappears after the procedure is terminated. Thus, for each procedure that is not terminated, an activation record that contains the state of that procedure is stored. The number of activation records, and hence the amount of stack space required to run the program, depends on the depth of recursion.

Figure 19.1 shows the stack activation records for factorial(3). As you can see from this figure, each call to the factorial function creates an activation record. Stack is used to keep these activation records.

Our First Program

To illustrate the principles of recursion, we look at an example that computes the factorial function. An implementation of the factorial function is shown in Program 19.1. The main function provides the user interface. It requests a positive number n from the user. If a negative number is given as input, the user is prompted to try again (lines 20–24). The positive number, which is read into the BX register, is passed on to the `fact` procedure (line 27). This procedure returns factorial(n) in the AX register, which is output with an appropriate message (lines 29–31).

Program 19.1 Recursive computation of factorial(N)

```
;Factorial - Recursive version            FACTORIAL.ASM
;
;        Objective: To compute factoral using recursion.
;            Input: Requests an integer N from the user.
;           Output: Outputs N!

%include "io.mac"

.DATA
prompt_msg  db  "Please enter a positive integer: ",0
output_msg  db  "The factorial is: ",0
error_msg   db  "Not a positive number. Try again.",0

.CODE
      .STARTUP
      PutStr  prompt_msg     ; request the number

try_again:
      GetInt  BX             ; read number into BX
      cmp     BX,0           ; test for a positive number
      jge     num_ok
      PutStr  error_msg
      nwln
      jmp     try_again

num_ok:
      call    fact

      PutStr  output_msg     ; output result
      PutInt  AX
      nwln

done:
      .EXIT

;-----------------------------------------------------
;Procedure fact receives a positive integer N in BX.
;It returns N! in the AX register.
;-----------------------------------------------------

fact:
      cmp     BL,1           ; if N > 1, recurse
      jg      one_up
      mov     AX,1           ; return 1 for N < 2
      ret                    ; terminate recursion

one_up:
      dec     BL             ; recurse with (N-1)
```

```
49:         call    fact
50:         inc     BL
51:         mul     BL              ; AX = AL * BL
52:
53:         ret
```

The `fact` procedure receives the number n in the BL register. It essentially implements the C code given before. One minor difference is that this procedure terminates when $n \leq 1$. This termination would save us one recursive call. When the value in BL is less than or equal to 1, the AX register is set to 1 to terminate the recursion. The activation record in this example consists of the return address pushed onto the stack by the `call` instruction. Since we are using the BL register to pass n, it is decremented before the call (line 48) and restored after the call (line 50). The multiply instruction

```
mul     BL
```

multiplies the contents of the BL and AL registers and places the 16-bit result in the AX register. This is the value returned by the `fact` procedure.

Illustrative Examples

We give two examples to further illustrate the principles of recursion. The first one computes a Fibonacci number and the second one implements the popular quicksort algorithm.

Example 19.1 *Computes the Nth Fibonacci number.*
The Fibonacci sequence of numbers is defined as

$$\begin{aligned} &\text{fib}(1) = 1, \\ &\text{fib}(2) = 1, \\ &\text{fib}(n) = \text{fib}(n-1) + \text{fib}(n-2) \text{ for } n > 2. \end{aligned}$$

In other words, the first two numbers in the Fibonacci sequence are 1. The subsequent numbers are obtained by adding the previous two numbers in the sequence. Thus,

$$1, 1, 2, 3, 5, 8, 13, 21, 34, 55, \ldots,$$

is the Fibonacci sequence of numbers. From this definition, you can see the recursive nature of the computation.

Program 19.1 shows the program to compute the Nth Fibonacci number. The value N is requested from the user as in the last program. The main program checks the validity of the input value. If the number is less than 1, an error message is displayed and the user is asked to enter a valid number (lines 20–24). If the input number is a valid one, it calls the `fib` procedure, which returns the Nth Fibonacci number in the EAX register. This value is output using `PutLInt` on line 30.

Program 19.2 A program to compute the Fibonacci numbers

```
;Fibonacci number - Recursive version          FIB.ASM
;
;        Objective: To compute the Fibonacci number.
;            Input: Requests an integer N from the user.
;           Output: Outputs fib(N).

%include "io.mac"

.DATA
prompt_msg  db  "Please enter a number > 0: ",0
output_msg  db  "fib(N) is: ",0
error_msg   db  "Not a valid number. Try again.",0

.CODE
      .STARTUP
      PutStr  prompt_msg     ; request the number

try_again:
      GetInt  BX             ; read number into BX
      cmp     BX,0           ; test if N>0
      jg      num_ok
      PutStr  error_msg
      nwln
      jmp     try_again

num_ok:
      call    fib

      PutStr  output_msg     ; output result
      PutLInt EAX
      nwln

done:
      .EXIT

;-----------------------------------------------------
;Procedure fib receives a positive integer N in BX.
;It returns fib(N) in the EAX register.
;-----------------------------------------------------

fib:
      cmp     BX,2           ; if N > 2, recurse
      jg      one_up
      mov     EAX,1          ; return 1 if N = 1 or 2
      ret                    ; terminate recursion

one_up:
      push    EDX
      dec     BX             ; recurse with (N-1)
```

```
50:         call    fib
51:         mov     EDX,EAX         ; save fib(N-1) in EDX
52:         dec     BX              ; recurse with (N-2)
53:         call    fib
54:         add     EAX,EDX         ; EAX = fib(N-2) + fib(N-1)
55:
56:         add     BX,2            ; restore BX and EDX
57:         pop     EDX
58:
59:         ret
```

The `fib` procedure uses recursion to compute the required Fibonacci number. The N value is received in the BX register. The recursion termination condition is implemented by lines 42–44. This procedure returns 1 in EAX if N is 1 or 2.

The recursion is implemented on lines 47–57. It decrements BX by one before calling the `fib` procedure to compute `fib(N−1)`. The value returned by this call is stored in the EDX register (line 51). The BX value is decremented again before calling `fib` on line 53 to compute `fib(N−2)`. The two `fib` values are added on line 54 to compute the `fib(N)` value. The procedure preserves both BX (line 56) and EDX (lines 48 and 57).

Example 19.2 *Implementation of the quicksort algorithm using recursion.*
Quicksort is one of the most popular sorting algorithms; it was proposed by C.A.R. Hoare in 1960. Once you understand the basic principle of the quicksort, you will see why recursion naturally expresses it.

At its heart, quicksort uses a divide-and-conquer strategy. The original sort problem is reduced to two smaller sort problems. This is done by selecting a partition element x and partitioning the array into two subarrays: all elements less than x are placed in one subarray and all elements greater than x are in the other. Now, we have to sort these two subarrays, which are smaller than the original array. We apply the same procedure to sort these two subarrays. This is where the recursive nature of the algorithm shows up. The quicksort procedure to sort an N-element array is summarized below:

1. Select a partition element x.
2. Assume that we know where this element x should be in the final sorted array. Let it be at `array[i]`. We give details of this step shortly.
3. Move all elements that are less than x into positions `array[0]` $\cdots$ `array[i-1]`. Similarly, move those elements that are greater than x into positions `array[i+1]` $\cdots$ `array[N-1]`. Note that these two subarrays are not sorted.
4. Now apply the quicksort procedure recursively to sort these two subarrays until the array is sorted.

How do we know the final position of the partition element x without sorting the array? We don't have to sort the array; we just need to know the number of elements either before or after it. To clarify the working of the quicksort algorithm, let us look at an example. In this example, and in our quicksort implementation, we pick the last element as the partition value. Obviously, the selection of the partition element influences performance of the quicksort. There are several better ways of selecting the partition value; you can get these details in any textbook on sorting.

Initial state:	2 9 8 1 3 4 7 6 ⟵	Partition element;
After 1st pass:	2 1 3 4 **6** 7 9 8	Partition element 6 is in its final place.

The second pass works on the following two subarrays.

1st subarray:	2 1 3 4;
2nd subarray:	7 9 8.

To move the partition element to its final place, we use two pointers i and j. Initially, i points to the first element and j points to the second-to-the-last element. Note that we are using the last

cdq — Convert doubleword to quadword

C	O	Z	S	P	A
–	–	–	–	–	–

Format: `cdq`

Description: Converts the signed doubleword in EAX to a signed quadword in EDX:EAX by copying the sign bit of EAX (the most significant bit) to all bits of EDX. Clock cycles: 2.

clc — Clear carry flag

C	O	Z	S	P	A
0	–	–	–	–	–

Format: `clc`

Description: Clears the carry flag. Clock cycles: 2.

cld — Clear direction flag

C	O	Z	S	P	A
–	–	–	–	–	–

Format: `cld`

Description: Clears the direction flag. Clock cycles: 2.

cmp — Compare two operands

C	O	Z	S	P	A
M	M	M	M	M	M

Format: `cmp dest,src`

Description: Compares the two operands specified by performing `dest - src`. However, the result of this subtraction is not stored (unlike the `sub` instruction) but only the flags are updated to reflect the result of the subtract operation. This instruction is typically used in conjunction with conditional jumps. If an operand greater than 1 byte is compared to an immediate byte, the byte value is first sign-extended. Clock cycles: 1 if no memory operand is involved; 2 if one of the operands is in memory.

cmps — Compare string operands

C	O	Z	S	P	A
M	M	M	M	M	M

Format:
```
cmps    dest,src
cmpsb
cmpsw
cmpsd
```

Description: Compares the byte, word, or doubleword pointed by the source index register (SI or ESI) with an operand of equal size pointed by the destination index register (DI or EDI). If the address size is 16 bits, SI and DI registers are used; ESI and EDI registers are used for 32-bit addresses. The comparison is done by subtracting operand pointed by the DI or EDI register from that by SI or ESI register. That is, the `cmps` instructions performs either [SI]−[DI] or [ESI]−[EDI]. The result is not stored but used to update the flags, as in the `cmp` instruction. After the comparison, both source and destination index registers are automatically updated. Whether these two registers are incremented or decremented depends on the direction flag (DF). The registers are incremented if DF is 0 (see the `cld` instruction to clear the direction flag); if the DF is 1, both index registers are decremented (see the `std` instruction to set the direction flag). The two registers are incremented or decremented by 1 for byte comparisons, 2 for word comparisons, and 4 for doubleword comparisons.

Note that the specification of the operands in `cmps` is not really required as the two operands are assumed to be pointed by the index registers. The `cmpsb`, `cmpsw`, and `cmpsd` are synonyms for the byte, word, and doubleword `cmps` instructions, respectively.

The repeat prefix instructions (i.e., `rep`, `repe` or `repne`) can precede the `cmps` instructions for array or string comparisons. See `rep` instruction for details. Clock cycles: 5.

cwd — Convert word to doubleword

C	O	Z	S	P	A
–	–	–	–	–	–

Format: `cwd`

Description: Converts the signed word in AX to a signed doubleword in DX:AX by copying the sign bit of AX (the most significant bit) to all bits of DX. In fact, `cdq` and this instruction use the same opcode (99H). Which one is executed depends on the default operand size. If the operand size is 16 bits, `cwd` is performed; `cdq` is performed for 32-bit operands. Clock cycles: 2.

cwde — Convert word to doubleword

C	O	Z	S	P	A
–	–	–	–	–	–

Format: `cwde`

Description: Converts the signed word in AX to a signed doubleword in EAX by copying the sign bit of AX (the most significant bit) to all bits of the upper word of EAX. In fact, `cbw` and `cwde` are the same instructions (i.e., share the same opcode of 98H). The action performed depends on the operand size. If the operand size is 16 bits, `cbw` is performed; `cwde` is performed for 32-bit operands. Clock cycles: 3.

daa — Decimal adjust after addition

C	O	Z	S	P	A
M	*	M	M	M	M

Format: `daa`

Description: The `daa` instruction is useful in BCD arithmetic. It adjusts the AL register to contain the correct two-digit packed decimal result. This instruction should be used after an addition instruction, as described in Chapter 18. Both AF and CF flags are set if there is a decimal carry; these two flags are cleared otherwise. The ZF, SF, and PF flags are set according to the result. Clock cycles: 3.

das — Decimal adjust after subtraction

C	O	Z	S	P	A
M	*	M	M	M	M

Format: `das`

Description: The `das` instruction is useful in BCD arithmetic. It adjusts the AL register to contain the correct two-digit packed decimal result. This instruction should be used after a subtract instruction, as described in Chapter 18. Both AF and CF flags are set if there is a decimal borrow; these two flags are cleared otherwise. The ZF, SF, and PF flags are set according to the result. Clock cycles: 3.

dec — Decrement by 1

C	O	Z	S	P	A
–	M	M	M	M	M

Format: `dec dest`

Description: The `dec` instruction decrements the `dest` operand by 1. The carry flag is not affected. Clock cycles: 1 if `dest` is a register; 3 if `dest` is in memory.

div — Unsigned divide

C	O	Z	S	P	A
*	*	*	*	*	*

Format: `div divisor`

Description: The `div` instruction performs unsigned division. The divisor can be an 8-, 16-, or 32-bit operand, located either in a register or in memory. The dividend is assumed to be in AX (for byte divisor), DX:AX (for word divisor), or EDX:EAX (for doubleword divisor). The quotient is stored in AL, AX, or EAX for 8-, 16-, and 32-bit divisors, respectively. The remainder is stored in AH, DX, or EDX for 8-, 16-, and 32-bit divisors, respectively. It generates interrupt 0 if the result cannot fit the quotient register (AL, AX, or EAX), or if the divisor is zero. See Chapter 14 for details. Clock cycles: 17 for an 8-bit divisor, 25 for a 16-bit divisor, and 41 for a 32-bit divisor.

enter — Allocate stack frame

C	O	Z	S	P	A
–	–	–	–	–	–

Format: `enter bytes,level`

Description: This instruction creates a stack frame at procedure entry. The first operand `bytes` specifies the number of bytes for the local variable storage in the stack frame. The second operand `level` gives the nesting level of the procedure. If we specify a nonzero level, it copies `level` stack frame pointers into the new frame from the preceding stack frame. In all our examples, we set the second operand to zero. Thus the

```
enter   XX,0
```

statement is equivalent to

```
push    EBP
mov     EBP,ESP
sub     ESP,XX
```

See Chapter 11 for more details on its usage. Clock cycles: 11 if `level` is zero.

hlt — Halt

C	O	Z	S	P	A
–	–	–	–	–	–

Format: `hlt`

Description: This instruction halts instruction execution indefinitely. An interrupt or a reset will enable instruction execution. Clock cycles: ∞.

idiv — Signed divide

C	O	Z	S	P	A
*	*	*	*	*	*

Format: `idiv divisor`

Description: Similar to `div` instruction except that `idiv` performs signed division. The divisor can be an 8-, 16-, or 32-bit operand, located either in a register or in memory. The dividend is assumed to be in AX (for byte divisor), DX:AX (for word divisor), or EDX:EAX (for doubleword divisor). The quotient is stored in AL, AX, or EAX for 8-, 16-, and 32-bit divisors, respectively. The remainder is stored in AH, DX, or EDX for 8-, 16-, and 32-bit divisors, respectively. It generates interrupt 0 if the result cannot fit the quotient register (AL, AX, or EAX), or if the divisor is zero. See Chapter 14 for details. Clock cycles: 22 for an 8-bit divisor, 30 for a 16-bit divisor, and 46 for a 32-bit divisor.

imul — Signed multiplication

C	O	Z	S	P	A
M	M	*	*	*	*

Format:
```
imul    src
imul    dest,src
imul    dest,src,constant
```

Description: This instruction performs signed multiplication. The number of operands for `imul` can be between 1 and 3, depending on the format used. In the one-operand format, the other operand is assumed to be in the AL, AX, or EAX register depending on whether the `src` operand is 8, 16, or 32 bits long, respectively. The `src` operand can be either in a register or in memory. The result, which is twice as long as the `src` operand, is placed in AX, DX:AX, or EDX:EAX for 8-, 16-, or 32-bit `src` operands, respectively. In the other two forms, the result is of the same length as the input operands.

The two-operand format specifies both operands required for multiplication. In this case, `src` and `dest` must both be either 16-bit or 32-bit operands. While `src` can be either in a register or in memory, `dest` must be a register.

In the three-operand format, a constant can be specified as an immediate operand. The result (`src × constant`) is stored in `dest`. As in the two-operand format, the `dest` operand must be a register. The `src` can be either in a register or in memory. The immediate constant can be an 8-, 16-, or 32-bit value. For additional restrictions, refer to the Pentium data book. Clock cycles: 10 (11 if the one-operand format is used with either 8- or 16-bit operands).

in — Input from a port

C	O	Z	S	P	A
–	–	–	–	–	–

Format:
```
in      dest,port
in      dest,DX
```

Description: This instruction has two formats. In both formats, `dest` must be the AL, AX, or EAX register. In the first format, it reads a byte, word, or double-word from `port` into the AL, AX, or EAX register, respectively. Note that `port` is an 8-bit immediate value. This format is restrictive in the sense that only the first 256 ports can be accessed. The other format is more flexible and allows access to the complete I/O space (i.e., any port between 0 and 65,535). In this format, the port number is assumed to be in the DX register. Clock cycles: varies—see Pentium data book.

inc — Increment by 1

C	O	Z	S	P	A
–	M	M	M	M	M

Format:
```
inc     dest
```

Description: The `inc` instruction increments the `dest` operand by 1. The carry flag is not affected. Clock cycles: 1 if `dest` is a register; 3 if `dest` is in memory.

ins — Input from a port to string

C	O	Z	S	P	A
–	–	–	–	–	–

Format:
```
insb
insw
insd
```

Description: This instruction transfers an 8-, 16-, or 32-bit data from the input port specified in the DX register to a location in memory pointed by ES:(E)DI. The DI index register is used if the address size is 16 bits and EDI index register for 32-bit addresses. Unlike the `in` instruction, the `ins` instruction does not allow the specification of the port number as an immediate value. After the data transfer, the index register is updated automatically. The index register is incremented if DF is 0; it is decremented if DF is 1. The index register is incremented or decremented by 1, 2, or 4 for byte, word, double-word operands, respectively. The repeat prefix can be used along with the `ins` instruction to transfer a block of data (the number of data transfers is indicated by the CX register—see the `rep` instruction for details). Clock cycles: varies—see Pentium data book.

int — Interrupt

C	O	Z	S	P	A
–	–	–	–	–	–

Format: `int interrupt-type`

Description: The `int` instruction calls an interrupt service routine or handler associated with `interrupt-type`. The `interrupt-type` is an immediate 8-bit operand. This value is used as an index into the Interrupt Descriptor Table (IDT). See Chapter 20 for details on the interrupt invocation mechanism. Clock cycles: varies—see Pentium data book.

into — Interrupt on overflow

C	O	Z	S	P	A
–	–	–	–	–	–

Format: `into`

Description: The `into` instruction is a conditional software interrupt identical to `int 4` except that the `int` is implicit and the interrupt handler is invoked conditionally only when the overflow flag is set. Clock cycles: varies—see Pentium data book.

iret — Interrupt return

C	O	Z	S	P	A
M	M	M	M	M	M

Format: `iret`
`iretd`

Description: The `iret` instruction returns control from an interrupt handler. In real address mode, it loads the instruction pointer and the flags register with values from the stack and resumes the interrupted routine. Both `iret` and `iretd` are synonymous (and use the opcode CFH). The operand size in effect determines whether the 16-bit or 32-bit instruction pointer (IP or EIP) and flags (FLAGS or EFLAGS) are to be used. See Chapter 20 for more details. This instruction affects all flags as the flags register is popped from stack. Clock cycles: varies—see Pentium data book.

jcc — Jump if condition cc is satisfied

C	O	Z	S	P	A
–	–	–	–	–	–

Format: `jcc target`

Description: The `jcc` instruction alters program execution by transferring control conditionally to the `target` location in the same segment. The `target` operand is a relative offset (relative to the instruction following the conditional jump instruction). The relative offset can be a signed 8-, 16-, or 32-bit value. Most efficient instruction encoding results if 8-bit offsets are used. With 8-bit offsets, the target should be within −128 to +127 of the first byte of the next instruction. For 16- and 32-bit offsets, the corresponding values are 2^{15} to $2^{15} - 1$ and 2^{31} to $2^{31} - 1$, respectively. When the target is in another segment, test for the opposite condition and use the unconditional `jmp` instruction, as explained in Chapter 15. See Chapter 15 for details on the various conditions tested like `ja`, `jbe`, etc. The `jcxz` instruction tests the contents of the CX or ECX register and jumps to the target location only if (E)CX = 0. The default operand size determines whether CX or ECX is used for comparison. Clock cycles: 1 for all conditional jumps (except `jcxz`, which takes 5 or 6 cycles).

jmp — Unconditional jump

C	O	Z	S	P	A
–	–	–	–	–	–

Format: `jmp target`

Description: The `jmp` instruction alters program execution by transferring control unconditionally to the `target` location. This instruction allows jumps to another segment. In direct jumps, the `target` operand is a relative offset (relative to the instruction following the `jmp` instruction). The relative offset can be an 8-, 16-, or 32-bit value as in the conditional jump instruction. In addition, the relative offset can be specified indirectly via a register or memory location. See Chapter 15 for an example. For other forms of the `jmp` instruction, see the Pentium data book. Note: Flags are not affected unless there is a task switch, in which case all flags are affected. Clock cycles: 1 for direct jumps, 2 for indirect jumps (more clock cycles for other types of jumps).

lahf — Load flags into AH register

C	O	Z	S	P	A
–	–	–	–	–	–

Format: `lahf`

Description: The `lahf` instruction loads the AH register with the low byte of the flags register. AH := SF, ZF, *, AF, *, PF, *, CF where * represent indeterminate value. Clock cycles: 2.

lds/les/lfs/lgs/lss — Load full pointer

C	O	Z	S	P	A
–	–	–	–	–	–

Format:

```
lds     dest,src
les     dest,src
lfs     dest,src
lgs     dest,src
lss     dest,src
```

Description: These instructions read a full pointer from memory (given by the `src` operand) and load the corresponding segment register (e.g., DS register for the `lds` instruction, ES register for the `les` instruction, etc.) and the `dest` register. The `dest` operand must be a 16- or 32-bit register. The first 2 or 4 bytes (depending on whether the `dest` is a 16- or 32-bit register) at the effective address given by the `src` operand are loaded into the `dest` register and the next 2 bytes into the corresponding segment register. Clock cycles: 4 (except `lss`).

lea — Load effective address

C	O	Z	S	P	A
–	–	–	–	–	–

Format: `lea  dest,src`

Description: The `lea` instruction computes the effective address of a memory operand given by `src` and stores it in the `dest` register. The `dest` must be either a 16- or 32-bit register. If the `dest` register is a 16-bit register and the address size is 32, only the lower 16 bits are stored. On the other hand, if a 32-bit register is specified when the address size 16 bits, the effective address is zero-extended to 32 bits. Clock cycles: 1.

leave — Procedure exit

C	O	Z	S	P	A
–	–	–	–	–	–

Format: `leave`

Description: The `leave` instruction takes no operands. Effectively, it reverses the actions of the `enter` instruction. It performs two actions:

- Releases the local variable stack space allocated by the `enter` instruction;
- Old frame pointer is popped into (E)BP register.

This instruction is typically used just before the `ret` instruction. Clock cycles: 3.

lods — Load string operand

C	O	Z	S	P	A
–	–	–	–	–	–

Format:
```
lodsb
lodsw
lodsd
```

Description: The `lods` instruction loads the AL, AX, or EAX register with the memory byte, word, or doubleword at the location pointed by DS:SI or DS:ESI. The address size attribute determines whether the SI or ESI register is used. The `lodsw` and `loadsd` instructions share the same opcode (ADH). The operand size is used to load either a word or a doubleword. After loading, the source index register is updated automatically. The index register is incremented if DF is 0; it is decremented if DF is 1. The index register is incremented or decremented by 1, 2, or 4 for byte, word, doubleword operands, respectively. The `rep` prefix can be used with this instruction but is not useful, as explained in Chapter 17. This instruction is typically used in a loop (see the `loop` instruction). Clock cycles: 2.

loop/loope/loopne — Loop control

C	O	Z	S	P	A
–	–	–	–	–	–

Format:
```
loop      target
loope/loopz     target
loopne/loopnz     target
```

Description: The `loop` instruction decrements the count register (CX if the address size attribute is 16 and ECX if it is 32) and jumps to `target` if the count register is not zero. This instruction decrements the (E)CX register without changing any flags. The operand `target` is a relative 8-bit offset (i.e., the target must be in the range −128 to +127 bytes).
The `loope` instruction is similar to `loop` except that it also checks the ZF value to jump to the `target`. That is, control is transferred to `target` if, after decrementing the (E)CX register, the count register is not zero and ZF = 1. The `loopz` is a synonym for the `loope` instruction.
The `loopne` instruction is similar to `loopne` except that it transfers control to `target` if ZF is 0 (instead of 1 as in the `loope` instruction). See Chapter 15 for more details on these instructions. Clock cycles: 5 or 6 for `loop` and 7 or 8 for the other two.
Note that the unconditional `loop` instruction takes longer to execute than a functionally equivalent two-instruction sequence that decrements the (E)CX register and jumps conditionally.

mov — Copy data

C	O	Z	S	P	A
–	–	–	–	–	–

Format: `mov  dest,src`

Description: Copies data from `src` to `dest`. Clock cycles: 1 for most `mov` instructions except when copying into a segment register, which takes more clock cycles.

movs — Copy string data

C	O	Z	S	P	A
–	–	–	–	–	–

Format:
```
movs    dest,src
movsb
movsw
movsd
```

Description: Copies the byte, word, or doubleword pointed by the source index register (SI or ESI) to the byte, word, or doubleword pointed by the destination index register (DI or EDI). If the address size is 16 bits, SI and DI registers are used; ESI and EDI registers are used for 32-bit addresses. The default segment for the source is DS and ES for the destination. Segment override prefix can be used only for the source operand. After the move, both source and destination index registers are automatically updated as in the `cmps` instruction.
The `rep` prefix instruction can precede the `movs` instruction for block movement of data. See `rep` instruction for details. Clock cycles: 4.

movsx — Copy with sign extension

C	O	Z	S	P	A
–	–	–	–	–	–

Format:
```
movsx   reg16,src8
movsx   reg32,src8
movsx   reg32,src16
```

Description: Copies the sign-extended source operand `src8/src16` into the destination `reg16/reg32`. The destination can be either a 16-bit or 32-bit register only. The source can be a register or memory byte or word operand. Note that `reg16` and `reg32` represent a 16- and 32-bit register, respectively. Similarly, `src8` and `src16` represent a byte and word operand, respectively. Clock cycles: 3.

movzx — Copy with zero extension

C	O	Z	S	P	A
–	–	–	–	–	–

Format:
```
movzx   reg16,src8
movzx   reg32,src8
movzx   reg32,src16
```

Description: Similar to `movsx` instruction except `movzx` copies the zero-extended source operand into destination. Clock cycles: 3.

mul — Unsigned multiplication

C	O	Z	S	P	A
M	M	*	*	*	*

Format:
```
mul     AL,src8
mul     AX,src16
mul     EAX,src32
```

Description: Performs unsigned multiplication of two 8-, 16-, or 32-bit operands. Only one of the operand needs to be specified; the other operand, matching in size, is assumed to be in the AL, AX, or EAX register.

- For an 8-bit multiplication, the result is in the AX register. CF and OF are cleared if AH is zero; otherwise, they are set.
- For a 16-bit multiplication, the result is in the DX:AX register pair. The higher-order 16 bits are in DX. CF and OF are cleared if DX is zero; otherwise, they are set.
- For a 32-bit multiplication, the result is in the EDX:EAX register pair. The higher-order 32 bits are in EDX. CF and OF are cleared if EDX is zero; otherwise, they are set.

Clock cycles: 11 for 8- or 16-bit operands and 10 for 32-bit operands.

neg — Negate sign (two's complement)

C	O	Z	S	P	A
M	M	M	M	M	M

Format:
```
neg     operand
```

Description: Performs 2's complement negation (sign reversal) of the operand specified. The operand specified can be 8, 16, or 32 bits in size and can be located in a register or memory. The operand is subtracted from zero and the result is stored back in the operand. The CF flag is set for nonzero result; cleared otherwise. Other flags are set according to the result. Clock cycles: 1 for register operands and 3 for memory operands.

nop — No operation

C	O	Z	S	P	A
–	–	–	–	–	–

Format:
```
nop
```

Description: Performs no operation. Interestingly, the `nop` instruction is an alias for the `xchg (E)AX,(E)AX` instruction. Clock cycles: 1.

not — Logical bitwise not

C	O	Z	S	P	A
–	–	–	–	–	–

Format: `not operand`

Description: Performs 1's complement bitwise **not** operation (a 1 becomes 0 and vice versa). Clock cycles: 1 for register operands and 3 for memory operands.

or — Logical bitwise or

C	O	Z	S	P	A
0	0	M	M	M	*

Format: `or dest,src`

Description: Performs bitwise **or** operation. The result (`dest` **or** `src`) is stored in `dest`. Clock cycles: 1 for register and immediate operands and 3 if a memory operand is involved.

out — Output to a port

C	O	Z	S	P	A
–	–	–	–	–	–

Format:
```
out     port,src
out     DX,src
```

Description: Like the `in` instruction, this instruction has two formats. In both formats, `src` must be in the AL, AX, or EAX register. In the first format, it outputs a byte, word, or doubleword from `src` to the I/O port specified by the first operand `port`. Note that `port` is an 8-bit immediate value. This format limits access to the first 256 I/O ports in the I/O space. The other format is more general and allows access to the full I/O space (i.e., any port between 0 and 65,535). In this format, the port number is assumed to be in the DX register. Clock cycles: varies—see Pentium data book.

outs — Output from a string to a port

C	O	Z	S	P	A
–	–	–	–	–	–

Format: `outsb`
`outsw`
`outsd`

Description: This instruction transfers an 8-, 16-, or 32-bit data from a string (pointed by the source index register) to the output port specified in the DX register. Similar to the `ins` instruction, it uses the SI index register for 16-bit addresses and the ESI register if the address size is 32. The (E)SI register is automatically updated after the transfer of a data item. The index register is incremented if DF is 0; it is decremented if DF is 1. The index register is incremented or decremented by 1, 2, or 4 for byte, word, or doubleword operands, respectively. The repeat prefix can be used with `outs` for block transfer of data. Clock cycles: varies—see Pentium data book.

pop — Pop a word from the stack

C	O	Z	S	P	A
–	–	–	–	–	–

Format: `pop dest`

Description: Pops a word or doubleword from the top of the stack. If the address size attribute is 16 bits, SS:SP is used as the top of the stack pointer; otherwise, SS:ESP is used. `dest` can be a register or memory operand. In addition, it can also be a segment register DS, ES, SS, FS, or GS (e.g., `pop DS`). The stack pointer is incremented by 2 (if the operand size is 16 bits) or 4 (if the operand size is 32 bits). Note that `pop CS` is not allowed. This can be done only indirectly by the `ret` instruction. Clock cycles: 1 if `dest` is a general register; 3 if `dest` is a segment register or memory operand.

popa — Pop all general registers

C	O	Z	S	P	A
–	–	–	–	–	–

Format: `popa`
`popad`

Description: Pops all eight 16-bit (`popa`) or 32-bit (`popad`) general registers from the top of the stack. The `popa` loads the registers in the order DI, SI, BP, discard next two bytes (to skip loading into SP), BX, DX, CX, and AX. That is, DI is popped first and AX last. The `popad` instruction follows the same order on the 32-bit registers. Clock cycles: 5.

popf — Pop flags register

C	O	Z	S	P	A
M	M	M	M	M	M

Format: `popf`
`popfd`

Description: Pops the 16-bit (`popf`) or 32-bit (`popfd`) flags register (FLAGS or EFLAGS) from the top of the stack. Bits 16 (VM flag) and 17 (RF flag) of the EFLAGS register are not affected by this instruction. Clock cycles: 6 in the real mode and 4 in the protected mode.

push — Push a word onto the stack

C	O	Z	S	P	A
–	–	–	–	–	–

Format: `push src`

Description: Pushes a word or doubleword onto the top of the stack. If the address size attribute is 16 bits, SS:SP is used as the top of the stack pointer; otherwise, SS:ESP is used. `src` can be (i) a register, or (ii) a memory operand, or (iii) a segment register (CS, SS, DS, ES, FS, or GS), or (iv) an immediate byte, word, or doubleword operand. The stack pointer is decremented by 2 (if the operand size is 16 bits) or 4 (if the operand size is 32 bits). The `push ESP` instruction pushes the ESP register value before it was decremented by the `push` instruction. On the other hand, `push SP` pushes the decremented SP value onto the stack. Clock cycles: 1 (except when the operand is in memory, in which case it takes 2 clock cycles).

pusha — Push all general registers

C	O	Z	S	P	A
–	–	–	–	–	–

Format: `pusha`
`pushad`

Description: Pushes all eight 16-bit (`pusha`) or 32-bit (`pushad`) general registers onto the stack. The `pusha` pushes the registers onto the stack in the order AX, CX, DX, BX, SP, BP, SI, and DI. That is, AX is pushed first and DI last. The `pushad` instruction follows the same order on the 32-bit registers. It decrements the stack pointer SP by 16 for word operands; decrements ESP by 32 for doubleword operands. Clock cycles: 5.

pushf — Push flags register

C	O	Z	S	P	A
–	–	–	–	–	–

Format: `pushf`
`pushfd`

Description: Pushes the 16-bit (`pushf`) or 32-bit (`pushfd`) flags register (FLAGS or EFLAGS) onto the stack. Decrements SP by 2 (`pushf`) for word operands and decrements ESP by 4 (`pushfd`) for doubleword operands. Clock cycles: 4 in the real mode and 3 in the protected mode.

rep/repe/repz/repne/repnz — Repeat instruction

C	O	Z	S	P	A
–	–	M	–	–	–

Format: `rep string-inst`
`repe/repz string-inst`
`repne/repnz string-inst`

Description: These three prefixes repeat the specified string instruction until the conditions are met. The `rep` instruction decrements the count register (CX or ECX) each time the string instruction is executed. The string instruction is repeatedly executed until the count register is zero. The `repe` (repeat while equal) has an additional termination condition: ZF = 0. The `repz` is an alias for the `repe` instruction. The `repne` (repeat while not equal) is similar to `repe` except that the additional termination condition is ZF =1. The `repnz` is an alias for the `repne` instruction. The ZF flag is affected by the `rep cmps` and `rep scas` instructions. For more details, see Chapter 17. Clock cycles: varies—see Pentium data book for details.

ret — Return form a procedure

C	O	Z	S	P	A
–	–	–	–	–	–

Format: `ret`
`ret value`

Description: Transfers control to the instruction following the corresponding `call` instruction. The optional immediate `value` specifies the number of bytes (for 16-bit operands) or number of words (for 32-bit operands) that are to be cleared from the stack after the return. This parameter is usually used to clear the stack of the input parameters. See Chapter 11 for more details. Clock cycles: 2 for near return and 3 for far return; if the optional `value` is specified, add one more clock cycle. Changing privilege levels takes more clocks—see Pentium data book.

rol/ror/rcl/rcr — Rotate instructions

C	O	Z	S	P	A
M	M	–	–	–	–

Format:

```
rol/ror/rcl/rcr    src,1
rol/ror/rcl/rcr    src,count
rol/ror/rcl/rcr    src,CL
```

Description: This group of instructions supports rotation of 8-, 16-, or 32-bit data. The `rol` (rotate left) and `ror` (rotate right) instructions rotate the `src` data as explained in Chapter 16. The second operand gives the number of times `src` is to be rotated. This operand can be given as an immediate value (a constant 1 or a byte value `count`) or preloaded into the CL register. The other two rotate instructions `rcl` (rotate left including CF) and `rcr` (rotate right including CF) rotate the `src` data with the carry flag (CF) included in the rotation process, as explained in Chapter 16. The OF flag is affected only for single bit rotates; it is undefined for multibit rotates. Clock cycles: `rol` and `ror` take 1 (if `src` is a register) or 3 (if `src` is a memory operand) for the immediate mode (constant 1 or `count`) and 4 for the CL version; for the other two instructions, it can take as many as 27 clock cycles—see Pentium data book for details.

sahf — Store AH into flags register

C	O	Z	S	P	A
M	–	M	M	M	M

Format: `sahf`

Description: The AH register bits 7, 6, 4, 2, and 0 are loaded into flags SF, ZF, AF, PF, and CF, respectively. Clock cycles: 2.

sal/sar/shl/shr — Shift instructions

C	O	Z	S	P	A
M	M	M	M	M	–

Format:

```
sal/sar/shl/shr    src,1
sal/sar/shl/shr    src,count
sal/sar/shl/shr    src,CL
```

Description: This group of instructions supports shifting of 8-, 16-, or 32-bit data. The format is similar to the rotate instructions. The `sal` (shift arithmetic left) and its synonym `shl` (shift left) instructions shift the `src` data left. The shifted out bit goes into CF and the vacated bit is cleared, as explained in Chapter 16. The second operand gives the number of times `src` is to be shifted. This operand can be given as an immediate value (a constant 1 or a byte value `count`) or preloaded into the CL register. The `shr` (shift right) is similar to `shl` except for the direction of the shift. The `sar` (shift arithmetic right) is similar to `sal` except for two differences: the shift direction is right and the sign bit is copied into the vacated bits. If shift count is zero, no flags are affected. The CF flag contains the last bit shifted out. The OF flag is defined only for single shifts; it is undefined for multibit shifts. Clock cycles: 1 (if `src` is a register) or 3 (if `src` is a memory operand) for the immediate mode (constant 1 or `count`) and 4 for the CL version.

sbb — Subtract with borrow

C	O	Z	S	P	A
M	M	M	M	M	M

Format:

```
sbb    dest,src
```

Description: Performs integer subtraction with borrow. The `dest` is assigned the result of `dest - (src+CF)`. Clock cycles: 1–3.

scas — Compare string operands

C	O	Z	S	P	A
M	M	M	M	M	M

Format:
```
scas    operand
scasb
scasw
scasd
```

Description: Subtracts the memory byte, word, or doubleword pointed by the destination index register (DI or EDI) from the AL, AX, or EAX register, respectively. The result is not stored but used to update the flags. The memory operand must be addressable from the ES register. Segment override is not allowed in this instruction. If the address size is 16 bits, DI register is used; EDI register is used for 32-bit addresses. After the subtraction, the destination index register is updated automatically. Whether the register is incremented or decremented depends on the direction flag (DF). The register is incremented if DF is 0 (see the `cld` instruction to clear the direction flag); if the DF is 1, the index register is decremented (see the `std` instruction to set the direction flag). The amount of increment or decrement is 1 (for byte operands), 2 (for word operands), or 4 (for doubleword operands).
Note that the specification of the operand in `scas` is not really required as the memory operand is assumed to be pointed by the index register. The `scasb`, `scasw`, and `scasd` are synonyms for the byte, word, and doubleword `scas` instructions, respectively.
The repeat prefix instructions (i.e., `repe` or `repne`) can precede the `scas` instructions for array or string comparisons. See the `rep` instruction for details. Clock cycles: 4.

setCC — Byte set on condition operands

C	O	Z	S	P	A
–	–	–	–	–	–

Format: `setCC  dest`

Description: Sets `dest` byte to 1 if the condition CC is met; otherwise, sets to zero. The operand `dest` must be either an 8-bit register or a memory operand. The conditions tested are similar to the conditional jump instruction (see `jcc` instruction). The conditions are A, AE, B, BE, E, NE, G, GE, L, LE, NA, NAE, NB, NBE, NG, NGE, NL, NLE, C, NC, O, NO, P, PE, PO, NP, O, NO, S, NS, Z, NZ. The conditions can specify signed and unsigned comparisons as well as flag values. Clock cycles: 1 for register operand and 2 for memory operand.

shld/shrd — Double precision shift

C	O	Z	S	P	A
M	M	M	M	M	*

Format: `shld/shrd dest,src,count`

Description: The `shld` instruction performs left shift of `dest` by `count` times. The second operand `src` provides the bits to shift in from the right. In other words, the `shld` instruction performs a left shift of `dest` concatenated with `src` and the result in the upper half is copied into `dest`. `dest` and `src` operands can both be either 16- or 32-bit operands. While `dest` can be a register or memory operand, `src` must be a register of the same size as `dest`. The third operand `count` can be an immediate byte value or the CL register can be used as in the shift instructions. The contents of the `src` register are not altered.
The `shrd` instruction (double precision shift right) is similar to `shld` except for the direction of the shift.
If the shift count is zero, no flags are affected. The CF flag contains the last bit shifted out. The OF flag is defined only for single shifts; it is undefined for multibit shifts. The SF, ZF, and PF flags are set according to the result. Clock cycles: 4 (5 if `dest` is a memory operand and the CL register is used for `count`).

stc — Set carry flag

C	O	Z	S	P	A
1	–	–	–	–	–

Format: `stc`

Description: Sets the carry flag to 1. Clock cycles: 2.

std — Set direction flag

C	O	Z	S	P	A
–	–	–	–	–	–

Format: `std`

Description: Sets the direction flag to 1. Clock cycles: 2.

sti — Set interrupt flag

C	O	Z	S	P	A
–	–	–	–	–	–

Format: `sti`

Description: Sets the interrupt flag to 1. Clock cycles: 7.

stos — Store string operand

C	O	Z	S	P	A
–	–	–	–	–	–

Format:
```
stosb
stosw
stosd
```

Description: Stores the contents of the AL, AX, or EAX register at the memory byte, word, or doubleword pointed by the destination index register (DI or EDI), respectively. If the address size is 16 bits, DI register is used; EDI register is used for 32-bit addresses. After the load, the destination index register is automatically updated. Whether this register is incremented or decremented depends on the direction flag (DF). The register is incremented if DF is 0 (see the `cld` instruction to clear the direction flag); if the DF is 1, the index register is decremented (see the `std` instruction to set the direction flag). The amount of increment or decrement depends on the operand size (1 for byte operands, 2 for word operands, and 4 for doubleword operands).
The repeat prefix instruction `rep` can precede the `stos` instruction to fill a block of CX/ECX bytes, words, or doublewords. Clock cycles: 3.

sub — Subtract

C	O	Z	S	P	A
M	M	M	M	M	M

Format: `sub dest,src`

Description: Performs integer subtraction. The `dest` is assigned the result of `dest – src`. Clock cycles: 1–3.

test — Logical compare

C	O	Z	S	P	A
0	0	M	M	M	*

Format: `test dest,src`

Description: Performs logical **and** operation (`dest` **and** `src`). However, the result of the **and** operation is discarded. The `dest` operand can be either in a register or in memory. The `src` operand can be either an immediate value or a register. Both `dest` and `src` operands are not affected. Sets SF, ZF, and PF flags according to the result. Clock cycles: 1 if `dest` is a register operand and 2 if it is a memory operand.

xchg — Exchange data

C	O	Z	S	P	A
–	–	–	–	–	–

Format: `xchg dest,src`

Description: Exchanges the values of the two operands `src` and `dest`. Clock cycles: 2 if both operands are registers or 3 if one of them is a memory operand.

xlat — Translate byte

C	O	Z	S	P	A
–	–	–	–	–	–

Format:
```
xlat    table-offset
xlatb
```

Description: Translates the data in the AL register using a table lookup. It changes the AL register from the table index to the corresponding table contents. The contents of the BX (for 16-bit addresses) or EBX (for 32-bit addresses) registers are used as the offset to the the translation table base. The contents of the AL register are treated as an index into this table. The byte value at this index replaces the index value in AL. The default segment for the translation table is DS. This is used in both formats. However, in the operand version, a segment override is possible. Clock cycles: 4.

xor — Logical bitwise exclusive-or

C	O	Z	S	P	A
0	0	M	M	M	*

Format: `xor dest,src`

Description: Performs logical bitwise exclusive-or (xor) operation (`dest` **xor** `src`) and the result is stored in `dest`. Sets the SF, ZF, and PF flags according to the result. Clock cycles: 1–3.

E

Glossary

Aborts See *Exceptions*

Access permissions Unix and Linux systems provide a sophisticated security mechanism to control access to individual files and directories. Each file and directory has certain access permissions that indicate who can access and in what mode (read-only, read/write, and so on). With these permissions the system can protect, for example, users from accessing other user's files. Linux, like the UNIX systems, associates three types of access permissions to files and directories: read (r), write (w), and execute (x). As the names indicate, the read permission allows read access and the write permission allows writing into the file or directory. The execute permission is required to execute a file and, for obvious reasons, should be used with binary and script files that contain executable code or commands. The Linux system uses nine bits to keep the access permissions as there are three types of users, each of which can have three types of permissions.

Address bus A group of parallel wires that carry the address of a memory location or I/O port. The width of the address bus determines the memory addressing capacity of a processor. Typically, 32-bit processors support 32-bit addresses. Thus, these processors can address up to 4 GB (2^{32} bytes) of main memory.

Addressing mode Most assembly language instructions require operands. There are several ways to specify the location of the operands. These are called the *addressing modes*. A complete discussion of the addressing modes is given in Chapter 13.

ALU see *Arithmetic and logic unit*

Arithmetic and logic unit This unit forms the computational core of a processor. It performs the basic arithmetic and logical operations such as integer addition, subtraction, and logical AND and OR functions.

Assembler Assembler is a program that translates an assembly language source program to its machine language equivalent (usually into an object file format such as ELF).

Assembler directives These directives provide information to the assembler on various aspects of the assembly process. These instructions are also called pseudo-ops. Assembler directives are nonexecutable and do not generate any machine language instructions.

Auxiliary flag The auxiliary flag indicates whether an operation has produced a result that has generated a carry out of or a borrow into the low-order four bits of 8-, 16-, or 32-bit operands. The auxiliary flag is set if there is such a carry or borrow; otherwise it is cleared.

Based addressing mode In this addressing mode, one of the registers acts as the base register in computing the effective address of an operand. The effective address is computed by adding the contents of the specified base register with a signed displacement value given as part of the instruction. For 16-bit addresses, the signed displacement is either an 8- or a 16-bit number. For 32-bit addresses, it is either an 8- or a 32-bit number. Based addressing provides a convenient way to access individual elements of a structure. Typically, a base register can be set up to point to the base of the structure and the displacement can be used to access an element within the structure.

Based-indexed addressing mode In this addressing mode, the effective address is computed as

Base + Index + signed displacement.

The displacement can be a signed 8- or 16-bit number for 16-bit addresses; it can be a signed 8- or 32-bit number for 32-bit addresses. This addressing mode is useful in accessing two-dimensional arrays with the displacement representing the offset to the beginning of the array. This mode can also be used to access arrays of records where the displacement represents the offset to a field in a record. In addition, this addressing mode is used to access arrays passed on to a procedure. In this case, the base register could point to the beginning of the array, and an index register can hold the offset to a specific element.

Based-indexed addressing mode with a scale factor In this addressing mode, the effective address is computed as

Base + (Index * scale factor) + signed displacement.

This addressing mode provides an efficient indexing mechanism into a two-dimensional array when the element size is 2, 4, or 8 bytes.

Big-endian byte order When storing multibyte data, the big-endian byte order stores the data from the most-significant byte to the least-significant byte.

Breakpoint Breakpoint is a debugging technique. Often we know that some parts of the program work correctly. In this case, it is a sheer waste of time to single step or trace the code. What we would like is to execute this part of the program and then stop for more careful debugging (perhaps by single stepping). Debuggers provide commands to set up breakpoints. The program execution stops at breakpoints, giving us a chance to look at the state of the program.

Bus protocol When there is more than one master device, which is typically the case, the device requesting the use of the bus sends a bus request signal to the bus arbiter using the bus request control line. If the bus arbiter grants the request, it notifies the requesting device by sending a signal on the bus grant control line. The granted device, which acts as the master, can then use the bus for data transfer. The bus-request-grant procedure is called *bus protocol.* Different buses use different bus protocols. In some protocols, permission to use the bus is granted for only one bus cycle; in others, permission is granted until the bus master relinquishes the bus.

Bus transaction A bus transaction refers to the data transfers taking place on the system bus. Some examples of bus transactions are memory read, memory write, I/O read, I/O write, and interrupt. Depending on the processor and the type of bus used, there may be other types of transactions. For example, the Pentium processor supports a burst mode of data transfer in which

up to four 64 bits of data can be transferred in a burst cycle. Every bus transaction involves a *master* and a *slave*. The master is the initiator of the transaction and the slave is the target of the transaction. The processor usually acts as the master of the system bus, while components like memory are usually slaves. Some components may act as slaves for some transactions and as masters for other transactions.

Call-by-value parameter passing In the call-by-value mechanism, the called function is provided only the current values of the arguments for its use. Thus, in this case, the values of these arguments are not changed in the called function; these values can only be used as in a mathematical function.

Call-by-reference parameter passing In the call-by-reference mechanism, the called function actually receives the addresses (i.e., pointers) of the parameters from the calling function. The function can change the contents of these parameters—and these changes will be seen by the calling function—by directly manipulating the argument storage space.

Carry flag The carry flag records the fact that the result of an arithmetic operation on unsigned numbers is out of range (too big or too small) to fit the destination register or memory location.

Clock A clock is a sequence of 1s and 0s. We refer to the period during which the clock is 1 as the ON period and the period with 0 as the OFF period. Even though we normally use symmetric clock signals with equal ON and OFF periods, clock signals can take asymmetric forms.

Clock cycle A clock cycle is defined as the time between two successive rising edges or between successive falling edges.

Clock frequency Clock frequency is measured in number of cycles per second. This number is referred to as Hertz (Hz). The abbreviation MHz refers to millions of cycles per second.

Clock period The clock period is defined as the time represented by one clock cycle.

Column-major order As the memory is a one-dimensional structure, we need to transform a multidimensional array to a one-dimensional structure. In the column-major order, array elements are stored column by column. This ordering is shown Figure 13.5b. Column-major ordering is used in FORTRAN.

Combinational circuits The output of a combinational circuit depends only on the current inputs applied to the circuit. The adder is an example of a combinational circuit.

Control bus The control bus consists of a set of control signals. Typical control signals include memory read, memory write, I/O read, I/O write, interrupt, interrupt acknowledge, bus request, and bus grant. These control signals indicate the type of action taking place on the system bus. For example, when the processor is writing data into the memory, the memory write signal is asserted. Similarly, when the processor is reading from an I/O device, the I/O read signal is asserted.

Data bus A group of parallel wires that carry the data between the processor and memory or I/O device. The width of data bus indicates the size of the data transferred between the processor and memory or I/O device.

DDD The Dynamic Data Display (DDD) provides a nice visual interface to command-line debuggers like GDB. For more details on this debugger interface, see Chapter 8.

Decoder A decoder is useful in selecting one-out-of-N lines. The input to a decoder is an I-bit binary (i.e., encoded) number and the output is 2^I bits of decoded data. Among the 2^I outputs of a decoder, only one output line is 1 at any time.

Define directive In the assembly language, allocation of storage space is done by the define assembler directive. The define directive can be used to reserve and initialize one or more bytes. However, no interpretation (as in a C variable declaration) is attached to the contents of these bytes. It is entirely up to the program to interpret the bit pattern stored in the space reserved for data.

Demultiplexer A demultiplexer has n selection inputs, 2^n data outputs, and one data input. Depending on the value of the selection input, the data input is connected to the corresponding data output.

Direct addressing mode This is a memory addressing mode. In this addressing mode, the offset value is specified directly as part of the instruction. In an assembly language program, this value is usually indicated by the variable name of the data item. The assembler translates this name into its associated offset value during the assembly process. To facilitate this translation, assembler maintains a symbol table. This addressing mode is the simplest of all the memory addressing modes. A restriction associated with the memory addressing modes is that these can be used to specify only one operand.

Direction flag The direction flag determines the direction of string processing done by the string instructions. If the direction flag is clear, string operations proceed in the forward direction (from head to tail of a string); otherwise, string processing is done in the opposite direction.

Effective address To locate a data item in the data segment, we need two components: the segment start address and an offset value within the segment. The start address of the segment is typically found in the DS register. The offset value is often called the effective address.

Executable instructions These instructions tell the processor what to do. Each executable instruction consists of an *operation code* (*opcode* for short). Executable instructions cause the assembler to generate machine language instructions. As stated in Chapter 1, each executable statement typically generates one machine language instruction.

Exceptions An exception is a type of interrupt that is generated by the processor. The exceptions are classified into *faults*, *traps*, and *aborts* depending on the way they are reported and whether the interrupted instruction is restarted. Faults and traps are reported at instruction boundaries. Faults use the boundary before the instruction during which the exception was detected. When a fault occurs, the system state is restored to the state before the current instruction so that the instruction can be restarted. The divide error, for instance, is a fault detected during the `div` or `idiv` instruction. Traps are reported at the instruction boundary immediately following the instruction during which the exception was detected. For instance, the overflow exception (interrupt 4) is a trap. Aborts are exceptions that report severe errors. Examples include hardware errors and inconsistent values in system tables.

EXTERN directive The `extern` directive is used to tell the assembler that certain labels are not defined in the current source file (i.e., module), but can be found in other modules. Thus, the assembler leaves "holes" in the corresponding object file that the linker will fill in later. This directive and the `global` directive facilitate separate assembly of source modules.

Fanin Fanin specifies the maximum number of inputs a logic gate can have.

Fanout Fanout refers to the driving capacity of an output. Fanout specifies the maximum number of gates that the output of a gate can drive.

Faults See *Exceptions*

Fetch-decode-execute cycle See *Processor execution cycle*

Full mapping Full mapping is useful in mapping a memory module to the memory address space. It refers to a one-to-one mapping function between the memory address and the address in memory address space. Thus, for each address value in memory address space that has a memory location mapped, there is one and only one memory location responding to the address. Full mapping, however, requires a more complex circuit to generate the chip select signal that is often not necessary.

GDB GDB is a GNU debugger. This is a command-line debugger. For more details on this debugger, see Chapter 8.

GLOBAL directive NASM provides the `global` directive to make the associated label(s) available to other modules of the program. This directive is useful in writing multimodule programs. Microsoft and Borland assemblers use `public` directive for this purpose. This directive and the `extern` directive facilitate separate assembly of source modules.

Hardware interrupts Hardware interrupts are of hardware origin and *asynchronous* in nature. These interrupts are used by I/O devices such as the keyboard to get the processor's attention. Hardware interrupts can be divided into either *maskable* or *nonmaskable* interrupts (see Figure 20.1). A nonmaskable interrupt (NMI) can be triggered by applying an electrical signal on the NMI pin of the processor. This interrupt is called nonmaskable because the processor always responds to this signal. In other words, this interrupt cannot be disabled under program control. Most hardware interrupts are of maskable type. To cause this type of interrupt, an electrical signal should be applied to the INTR (INTerrupt Request) input of the processor. The processor recognizes the INTR interrupt only if the interrupt enable flag (IF) bit of the flags register is set to 1. Thus, these interrupts can be masked or disabled by clearing the IF bit.

I/O port An I/O port can be thought of as the address of a register associated with an I/O controller.

Immediate addressing mode In this addressing mode, data is specified as part of the instruction itself. As a result, even though the data is in memory, it is located in the code segment, not in the data segment. This addressing mode is typically used in instructions that require at least two data items to manipulate. In this case, this mode can only specify the source operand and immediate data is always a constant. Thus, instructions typically use another addressing mode to specify the destination operand.

Indexed addressing mode In this addressing mode, the effective address is computed as

$$(\text{Index} * \text{scale factor}) + \text{signed displacement}.$$

For 16-bit addresses, no scaling factor is allowed (see Table 13.1 on page 275). For 32-bit addresses, a scale factor of 2, 4, or 8 can be specified. Of course, we can use a scale factor in the 16-bit addressing mode by using an address size override prefix. The indexed addressing mode is often used to access elements of an array. The beginning of the array is given by the displacement, and the value of the index register selects an element within the array. The scale factor is particularly useful to access arrays whose element size is 2, 4, or 8 bytes.

Indirect addressing mode This is a memory addressing mode. In this addressing mode, the offset or effective address of the data is in one of the general registers. For this reason, this addressing mode is sometimes referred to as the register indirect addressing mode.

Interrupt enable flag See *Hardware interrupts*

Interrupts Interrupt is a mechanism by which a program's flow control can be altered. Interrupts provide a mechanism similar to that of a procedure call. Causing an interrupt transfers control to a procedure, which is referred to as an *interrupt service routine* (ISR). An ISR is sometimes called a *handler*. When the ISR is completed, the interrupted program resumes execution as if it were not interrupted. This behavior is analogous to a procedure call. There are, however, some basic differences between procedures and interrupts that make interrupts almost indispensable. One of the main differences is that interrupts can be initiated by both software and hardware. In contrast, procedures are purely software-initiated. The fact that interrupts can be initiated by hardware is the principal factor behind much of the power of interrupts. This capability gives us an efficient way by which external devices can get the processor's attention.

Isolated I/O In isolated I/O, I/O ports are mapped to an I/O address space that is separate from the memory address space. In architectures such as the IA-32, which use the isolated I/O, special I/O instructions are needed to access the I/O address space. The IA-32 instruction set provides two instructions—`in` and `out`—to access I/O ports. The `in` instruction can be used to read from an I/O port and the `out` for writing to an I/O port.

Linker Linker is a program that takes one or more object programs as its input and produces executable code.

Little-endian byte order When storing multibyte data, the little-endian byte order stores the data from the least-significant byte to the most-significant byte. The Intel 32-bit processors such as the Pentium use this byte order.

Machine language Machine language is a close relative of the assembly language. Typically, there is a one-to-one correspondence between the assembly language and machine language instructions. The processor understands only the machine language, whose instructions consist of strings of 1s and 0s.

Macros Macros provide a sophisticated text substitution mechanism. Macros permit the assembly language programmer to name a group of statements and refer to the group by the macro name. During the assembly process, each macro is replaced by the group of statements that it represents and assembled in place. This process is referred to as macro expansion. Macros are discussed in detail in Chapter 10.

Maskable interrupts See *Hardware interrupts*

Memory address space This refers to the amount of memory that a processor can address. Memory address space depends on the system address bus width. Typically, 32-bit processors support 32-bit addresses. Thus, these processors can address up to 4 GB (2^{32} bytes) of main memory. The actual memory in a system, however, is always less than or equal to the memory address space. The amount of memory in a system is determined by how much of this memory address space is populated with memory chips.

Memory-mapped I/O In memory-mapped I/O, I/O ports are mapped to memory addresses. In systems that use memory mapped I/O, writing to an I/O port is similar to writing to a memory location.

Multiplexer A multiplexer is characterized by 2^n data inputs, n selection inputs, and a single output. It connects one of 2^n inputs, selected by the selection inputs, to the output.

Nonmaskable interrupts See *Hardware interrupts*

Offset See *Effective address*

Overflow flag The overflow flag is the carry flag counterpart for the signed number arithmetic. The main purpose of the overflow flag is to indicate whether an operation on signed numbers has produced a result that is out of range.

PALs see *Programmable array logic device*

Parameter passing Parameter passing in assembly language is different and more complicated than that used in high-level languages. In the assembly language, the calling procedure first places all the parameters needed by the called procedure in a mutually accessible storage area (usually registers or memory). Only then can the procedure be invoked. There are two common methods depending on the type of storage area used to pass parameters: register method or stack method. As their names imply, the register method uses general-purpose registers to pass parameters, and the stack is used in the other method.

Parity flag The parity flag indicates the parity of the 8-bit result produced by an operation; if this result is 16 or 32 bits long, only the lower-order 8 bits are considered to set or clear the parity flag. The parity flag is set if the byte contains an even number of 1 bits; if there are an odd number of 1 bits, it is cleared. In other words, the parity flag indicates an even parity condition of the byte.

Partial mapping Partial mapping is useful in mapping a memory module to the memory address space. This mapping reduces the complexity associated with full mapping by mapping each memory location to more than one address in the memory address space. Typically, the number of addresses a location is mapped to is a power of 2.

Path name A path name specifies the location of a file or directory in hierarchical file system. A path can be specified as the absolute path or a relative path. In the former specification, you give the location of a file/directory starting from the root directory. Absolute path always begins with the root directory (`/`). In contrast, a relative path specifies the path relative to your current directory.

Pipe Linux provides several commands, which can be treated as the basic building blocks. Often, we may need several commands to accomplish a complicated task. We may have to feed the output of one command as input to another to accomplish a task. The shell provides the pipe operator (`|`) to achieve this. The syntax is

```
command1 | command2
```

The output of the first command (`command1`) is fed as input to the second command (`command2`). The output of `command2` is the final output. Of course, we can generalize this to connect several commands.

Processor execution cycle The processor execution cycle consists of the following: (i) Fetch an instruction from the memory; (ii) Decode the instruction (i.e., identify the instruction); (iii) Execute the instruction (i.e., perform the action specified by the instruction).

Programmable array logic device A programmable array logic device is very similar to the PLA except that there is no programmable OR array. Instead, the OR connections are fixed. This reduces the complexity by cutting down the set of fuses in the OR array. Due to their cost advantage, most manufacturers produce only PALs.

Programmable logic array A programmable logic array is a field programmable device to implement sum-of-product expressions. It consists of an AND array and an OR array. A PLA takes N inputs and produces M outputs. Each input is a logical variable. Each output of a PLA

represents a logical function output. Internally, each input is complemented, and a total of $2N$ inputs is connected to each AND gate in the AND array through a fuse. Each AND gate can be used to implement a product term in the sum-of-products expression. The OR array is organized similarly except that the inputs to the OR gates are the outputs of the AND array. Thus, the number of inputs to each OR gate is equal to the number of AND gates in the AND array. The output of each OR gate represents a function output.

PLA See *Programmable logic array*

Propagation delay Propagation delay represents the time required for the output of a circuit to react to an input. The propagation delay depends on the complexity of the circuit and the technology used.

Protected-mode memory architecture The IA-32 architecture supports a sophisticated memory architecture under real and protected modes. The protected mode uses 32-bit addresses and is the native mode of the IA-32 architecture. In the protected mode, both segmentation and paging are supported. Paging is useful in implementing virtual memory; it is transparent to the application program, but segmentation is not.

Queue A queue is a first-in-first-out (FIFO) data structure. A queue can be considered as a linear array with insertions done at one end of the array and deletions at the other end.

Real-mode memory architecture The IA-32 architecture supports a sophisticated memory architecture under real and protected modes. The real mode, which uses 16-bit addresses, is provided to run programs written for the 8086 processor. In this mode, it supports the segmented memory architecture of the 8086 processor.

Register addressing mode In this addressing mode, processor's internal registers contain the data to be manipulated by an instruction. Register addressing mode is the most efficient way of specifying operands because they are within the processor and, therefore, no memory access is required.

Row-major order As the memory is a one-dimensional structure, we need to transform a multidimensional array to a one-dimensional structure. In the row-major order, array elements are stored row by row. This ordering is shown Figure 13.5a. Row-major ordering is used in most high-level languages including C.

Segment descriptors A segment descriptor provides the attributes of a segment. These attributes include its 32-bit base address, 20-bit segment size, as well as control and status information.

Segment registers In the IA-32 architecture, these registers support the segmented memory organization. In this organization, memory is partitioned into segments, where each segment is a small part of the memory. The processor, at any point in time, can only access up to six segments of the main memory. The six segment registers point to where these segments are located in the memory.

Sequential circuits The output of a sequential circuit depends not only on the current inputs but also on the past inputs. That is, output depends both on the current inputs as well as on how it got to the current state. For example, in a binary counter, the output depends on the current value. The next value is obtained by incrementing the current value (in a way, the current state represents a snapshot of the past inputs). That is, we cannot say what the output of a counter will be unless we know its current state. Thus, the counter is a sequential circuit.

Shell The shell can be thought of as the user's interface to the operating system. It acts as the command line interpreter. Several popular shells including the Bourne shell (`sh`), C-shell (`csh`), Korn shell (`ksh`), and Bourne Again shell (`bash`) are available. However, `bash` is the default shell in Fedora 3.

Sign flag The sign flag indicates the sign of the result of an operation. Therefore, it is useful only when dealing with signed numbers. Note that the most significant bit is used to represent the sign of a number: 0 for positive numbers and 1 for negative numbers. The sign flag gets a copy of the sign bit of the result produced by arithmetic and related operations.

Single-stepping Single-stepping is a debugging technique. To isolate a bug, program execution should be observed in slow motion. Most debuggers provide a command to execute the program in single-step mode. In this mode, a program executes a single statement and pauses. Then we can examine contents of registers, data in memory, stack contents, and so on.

Software interrupts Software interrupts are caused by executing the `int` instruction. Thus these interrupts, like procedure calls, are anticipated or planned events. The main use of software interrupts is in accessing I/O devices such as the keyboard, printer, display screen, disk drive, and so on.

Stack A stack is a last-in-first-out (LIFO) data structure. The operation of a stack is analogous to the stack of trays you find in cafeterias. The first tray removed from the stack of trays would be the last tray that had been placed on the stack. There are two operations associated with a stack: insertion and deletion. In stack terminology, insert and delete operations are referred to as push and pop operations, respectively.

Status flags Status flags are used to monitor the outcome of the arithmetic, logical, and related operations. There are six status flags. These are the zero flag (ZF), carry flag (CF), overflow flag (OF), sign flag (SF), auxiliary flag (AF), and parity flag (PF). When an arithmetic operation is performed, some of the flags are updated (set or cleared) to indicate certain properties of the result of that operation. For example, if the result of an arithmetic operation is zero, the zero flag is set (i.e., ZF = 1). Once the flags are updated, we can use conditional branch instructions to alter flow control.

Symbolic debugging Symbolic debugging allows us to debug using the source-level statements. However, to facilitate symbolic debugging, we need to pass the source code and symbol table information to the debugger. The GNU debugger expects the symbolic information in the `stabs` format. More details on this topic are given in Chapter 8.

System bus A system bus interconnects the three main components of a computer system: a central processing unit (CPU) or processor, a memory unit, and input/output (I/O) devices. The three major components of the system bus are the address bus, data bus, and control bus (see Figure 2.1).

Top of stack If we view the stack as a linear array of elements, stack insertion and deletion operations are restricted to one end of the array. The top-of-stack (TOS) identifies the only element that is directly accessible from the stack.

TOS see *Top of stack*

Trace Tracing is a debugging technique similar to the single stepping. In the single-step mode, a procedure call is treated as a single statement and the entire procedure is executed before pausing the program. This is useful if you know that the called procedure works correctly. Trace, on the other hand, can be used to single-step even the statements of a procedure call, which is useful to test procedures.

Traps See *Exceptions*

Tristate buffers Tristate buffers can be in three states: 0, 1, or Z state. A tristate buffer output can be in state 0 or 1 just as with a normal logic gate. In addition, the output can also be in a high impedance (Z) state, in which the output floats. Thus, even though the output is physically connected to the bus, it behaves as though it is electrically and logically disconnected from the bus. Tristate buffers use a separate control signal so that the output can be in a high impedance state, independent of the data input. This particular feature makes them suitable for bus connections.

Web browser An Internet application that allows you to surf the web. Netscape Navigator, Mozilla Fire Fox, and Microsoft Internet Explorer are some of the popular Web browsers.

Zero flag The purpose of the zero flag (ZF) is to indicate whether the execution of the last instruction that affects the zero flag has produced a zero result. If the result was zero, ZF = 1; otherwise, ZF = 0.

Index

Symbols
.CODE macro, 156
.DATA macro, 156
.EXIT macro, 156
.STARTUP macro, 156
.UDATA macro, 156
`$`, location counter, 282, 364
`include` directive, 156
1's complement, 467
2's complement, 468
80286 processor, 61
80386 processor, 62
80486 processor, 62
8080 processor, 61
8086 family processors, 61–62

A
aborts, 408
absolute path, 139
access permissions, 141
    octal mode, 143
    setting, 143
    symbolic mode, 144
Ackermann's function, 481
activation record, 256, 392
adders, 26
    carry lookahead adders, 28
    full-adder, 27
    half-adder, 26
    ripple-carry adders, 27
address bus, 11
address size override prefix, 275
address translation, 73
    protected mode, 67, 68
    real mode, 73
addressing modes, 193–196, 273–278
    16-bit, 274
    32-bit, 274
    based addressing mode, 276
    based-indexed addressing mode, 278
    direct addressing mode, 194
    immediate addressing mode, 194
    indexed addressing mode, 277
    indirect addressing mode, 195
    register addressing mode, 193
alignment check flag, 66
ALUs, *see* arithmetic logic units
AND gate, 13
arithmetic logic units, 32
arrays, 278–289
    column-major order, 280
    multidimensional, 279
    one-dimensional, 278
    row-major order, 280
ASCII addition, 381
    multidigit, 384
ASCII division, 383
ASCII multiplication, 383
ASCII number representation, 380
ASCII subtraction, 382
ASCIIZ string, 364
assembler directives, 187
assembly language
    advantages, 7–8
    applications, 8
    what is it, 5–6
assembly process, 160
AT&T syntax, 434
    addressing, 435
    operand size, 434
    register naming, 434
auxiliary flag, 299

B
based addressing mode, 276
based-indexed addressing mode, 278
bash, 135
BCD number representation, 380
    packed, 381
    unpacked, 380
binary numbers, 463
    conversion, 464, 465
binary search, 285
bit, 45
bit manipulation, 348
    clearing bits, 343
    cutting and pasting, 344
    isolating bits, 343
    toggling, 345
Boolean algebra, 18–19
    identities, 18
breakpoint interrupt, 410
bubble notation, 17
bubble sort, 262
building larger memories, 52
burst cycle, 12
bus cycle, 12
bus grant, 13
bus protocol, 13
bus request, 13
bus transactions, 12
byte, 45
byte addressable memory, 45
byte ordering, 58
    big-endian, 58
    little-endian, 58

C
call-by-reference, 232
call-by-value, 232
calling assembly procedures from C, 424
calling C from assembly, 432
carry flag, 294
cat command, 140
cd command, 140
changing password, 120
character representation, 473–474
    extended ASCII, 474
chip select, 51, 54, 57, 58
chmod command, 143
clobber list, 438
clock cycle, 36
clock frequency, 36
clock period, 36
clock signal, 35–37
    cycle, 36
    falling edge, 36
    frequency, 36
    period, 36
    rising edge, 36
column-major order, 280
command line completion, 136
commands
    cat, 140
    cd, 140
    chmod, 143
    cp, 141
    echo, 137
    grep, 146
    head, 141
    history, 136
    less, 141
    ls, 140, 142, 143
    man, 134
    mkdir, 140
    more, 140
    mv, 141
    passwd, 135, 137
    ps, 138
    pwd, 140
    rm, 140, 141
    rmdir, 140
    set, 146
    sort, 146
    su, 138
    tail, 141
    uname, 137
    wc, 145
    whereis, 137
comparators, 26
control bus, 12
counters, 41
cp command, 141
CPUID instruction, 66

D
data alignment, 59–60

2-byte data, 60
4-byte data, 60
8-byte data, 60
hard alignment, 60
soft alignment, 60
data allocation, 188–192
define directives, 189–191
multiple definitions, 191–192
multiple initializations, 192
data bus, 11
Data display debugger (DDD), 179–183
DB directive, 189
DD directive, 189
decoders, 26
dedicated interrupts, 409
demultiplexers, 25
denormalized values, 470
direction flag, 366
DQ directive, 189
DT directive, 189
DW directive, 189

E

`echo` command, 137
effective address, 72, 194, 195
EQU directive, 217
even parity, 343, 344
exceptions, 404, 408
aborts, 408
faults, 408
segment-not-present, 70, 409
traps, 408, 409
excess-M number representation, 466
exclusive-OR gate, 13
executable instructions, 187
execution cycle, 63
EXTERN directive, 260

F

factorial, 391–394
recursive procedure, 392
faults, 408
Fibonacci number, 401
file descriptor, 411
file pointer, 411
file system
browsing, 126
firewall setup, 100
flags register, 66, 292–302
auxiliary flag, 299
carry flag, 294
CF, 294
direction flag, 366, 420
IF flag, 418
OF, 296
overflow flag, 296
parity flag, 300
PF, 300
SF, 298
sign flag, 298
status flags, 292–302
trap flag, 409
zero flag, 292
ZF, 292
flat segmentation model, 71
flip-flops, 39–40
floating-point, 469–471
denormals, 452, 470
formats, 444
IEEE 754, 470
representation, 469
special values, 470
∞, 470
NaN, 470
zero, 470
floating-point unit organization, 444
frame pointer, 245, 256
full-adder, 27

G

GDB, 170–178
commands, 171–173
`gedit`, 127
GetInt8, 313
getting help, 134
GLOBAL directive, 260
GNOME desktop, 126
`grep` command, 146

H

half-adder, 26
hardware interrupts, 404, 418

INTA signal, 419
INTR input, 418
maskable, 405, 418
NMI, 418
nonmaskable, 405, 418
head command, 141
hexadecimal numbers, 463
high-level language interface, 423–441
assembling, 424
calling assembly procedures from C, 424
calling C from assembly, 432
externals, 427
globals, 427
inline assembly, 434–441
parameter passing, 425
preserving registers, 427
returning values, 427
high-level language structures
switch, 337
history command, 136
HOME, 139

I
I/O address space, 419
I/O controller, 76
I/O device, 76
I/O ports, 77, 419
16-bit ports, 419
32-bit ports, 419
8-bit ports, 419
accessing, 419
in, 419
ins, 420
out, 420
outs, 420
I/O routines, 157
GetCh, 156
GetInt, 158
GetLInt, 158
GetStr, 157
PutCh, 156
PutInt, 158
PutLInt, 158
PutStr, 157
IA-32 flags register, 66
IA-32 instructions
aaa, 380–382, 488
aad, 380, 383, 488
aam, 380, 383, 488
aas, 380, 382, 488
adc, 489
add, 198, 489
and, 203, 342, 489
arithmetic instructions, 302–309
bit instructions, 354–355
brf, 355
bsf, 355, 489
bsr, 490
bswap, 212, 490
bt, 355, 490
btc, 355, 490
btr, 355, 491
bts, 355, 491
call, 239, 378, 491
cbw, 308, 491
cdq, 308, 492
clc, 492
cld, 366, 492
cli, 407, 418, 492
cmc, 492
cmp, 199, 493
cmps, 370, 493
conditional jump, 500
cwd, 308, 494
cwde, 308, 494
daa, 381, 385, 494
das, 381, 386, 495
dec, 197, 296, 495
div, 306, 409, 495
division instructions, 306
doubleshift instructions, 352
enter, 247, 259, 496
hlt, 496
idiv, 306, 409, 497
imul, 305, 497
in, 419, 498
inc, 197, 296, 498
ins, 420, 498
insb, 498
insd, 498
insw, 498
int, 410, 499
into, 499
iret, 499

iretd, 499
ja, 324
jae, 324
jb, 324
jbe, 324
jc, 201, 294, 323
jcc, 500
jcxz, 323, 500
jecxz, 329
je, 201, 323, 324, 326
jcxz, 330
jg, 201, 326
jge, 201, 326
jl, 201, 326
jle, 201, 326
jmp, 200, 318, 335, 500
jna, 324
jnae, 324
jnb, 324
jnbe, 324
jnc, 294, 323
jnc
jne, 201, 323, 324, 326
jng, 326
jnge, 326
jnl, 326
jnle, 326
jno, 297, 323, 410
jnp, 300, 323
jns, 298, 323
jnz, 201, 293, 323, 324, 326
jo, 297, 323, 410
jp, 300, 323
jpe, 323
jpo, 323
js, 298, 323
jz, 201, 293, 323, 324, 326
lahf, 501
lds, 68, 373, 501
lea, 195, 501
leave, 248, 260, 502
les, 68, 373, 501
lfs, 68, 501
lgdt, 70
lgs, 68, 501
lidt, 405
lldt, 70
lods, 368, 502
lodsb, 368, 502
lodsd, 368, 502
lodsw, 368, 502
logical instructions, 342–347
loop, 202, 327, 330, 503
loop instructions, 327
loope, 327
loope/loopz, 503
loopne, 327
loopne/loopnz, 503
loopnz, 327
loopz, 327
lss, 68, 501
mov, 68, 196, 503
movs, 367, 504
movsb, 367, 504
movsd, 367, 504
movsw, 367, 504
movsx, 308, 504
movzx, 308, 504
mul, 304, 505
multiplication instructions, 303
neg, 505
nop, 505
not, 203, 346, 506
or, 203, 344, 506
out, 420, 506
outs, 420, 507
pop, 68, 75, 236, 507
popa, 247, 507
popad, 237
popaw, 237
popf, 237, 508
popfd, 508
procedure template, 248
push, 75, 236, 508
pusha, 246, 508
pushad, 237
pushaw, 237
pushf, 237, 509
rcl, 215, 510
rcr, 215, 510
rep, 365, 420, 509
repe, 366, 420
repe/repz, 509
repne, 366, 420

repne/repnz, 509
repnz, 366
repz, 366
ret, 241, 245, 509
rol, 215, 510
ror, 215, 510
rotate instructions, 353–354
sahf, 510
sal, 350, 511
sar, 350, 511
sbb, 511
scas, 371, 512
scasb, 371, 512
scasd, 371, 512
scasw, 371, 512
setCC, 512
sgdt, 70
shift instructions, 347–353
shl, 213, 511
shld, 352, 513
shr, 213, 511
shrd, 352, 513
sidt, 405
sldt, 70
stc, 513
std, 366, 513
sti, 407, 418, 513
stos, 368, 514
stosb, 368, 514
stosd, 368, 514
stosw, 368, 514
sub, 199, 514
test, 204, 347, 514
xchg, 212, 515
xlat, 213, 227, 515
xor, 203, 345, 515
IA-32 processor
CPUID instruction, 66
EIP register, 66
flags register, 66
alignment check flag, 66
control flags, 66
EFLAGS, 66
FLAGS, 66
interrupt flag, 66
status flags, 66
system flags, 66
trap flag, 66
VM flag, 66
zero flag, 66
floating-point instructions, 447–453
addition, 449
comparison, 451
data movement, 448
division, 451
miscellaneous, 452
multiplication, 450
subtraction, 449
floating-point registers, 444–447
floating-point unit organization, 444
instruction fetch, 75
IP register, 66
memory architecture, *see* memory architecture
protected mode, 67
real mode, 72
stack implementation, 234
stack operations, 236
IA-32 registers, 63–67, 444–447
control registers, 65
data registers, 64
floating-point registers, 444–447
index registers, 65
pointer registers, 65
segment registers, *see* segment registers
IA-32 trap flag, 66
ICs, *see* integrated circuits
IEEE 754 floating-point standard, 443, 470
indexed addressing mode, 277
indirect procedure call, 378
inline assembly, 434–441, 457
clobber list, 438
input/output
I/O address space, 77
isolated I/O, 77
memory-mapped I/O, 77
insertion sort, 282
installation, 92–107
getting help, 114
instruction decoding, 63
instruction execution, 63
instruction fetch, 63, 75
instruction pointer, 65
int 21H, 156

int 21H DOS services
4CH return control, 156
int 3, 410
int 4, 410
integrated circuits, 14
LSI, 14
MSI, 14
propagation delay, 14
SSI, 14
SSI chips, 14
VLSI, 14
interrupt 1, 409
interrupt 2, 418
interrupt 4, 409
interrupt descriptor table, 405
interrupt flag, 66, 418
interrupt handler, 403
interrupt processing
protected mode, 405
interrupt service routine, 403
interrupts
breakpoint, 410
dedicated, 409
descriptors, 406
divide error, 409
exceptions, 404, 408
handler, 403
hardware, 418
hardware interrupts, 404
IDT organization, 406
ISR, 403
maskable, 405
nonmaskable, 405
overflow, 410
single-step, 409
software interrupts, 404
taxonomy, 404, 407
into, 410
isolated I/O, 77
Itanium processor, 62

J

jump instructions
backward jump, 318
conditional jump, 322–327
far jump, 319
forward jump, 318
indirect jump, 335–339
intersegment jump, 319
intrasegment jump, 319
near jump, 319
SHORT directive, 319
short jump, 319
unconditional jump, 318
direct, 318

K

Karnaugh maps, 19–23
keyboard configuration, 117

L

latches, 37–39
clocked SR latch, 38
D latch, 39
SR latch, 37
ld, 166
left-pusher language, 425
`less` command, 141
linear address, 67
linear search, 330
linking, 166
Linux, 154
Linux system calls, 411
file system calls, 411
file close, 414
file create, 412
file open, 413
file read, 413
file write, 414
lseek, 414
local variables, 256
logic circuits
adders, 26
ALUs, 32
bubble notation, 17
comparators, 26
counters, 41
decoders, 26
demultiplexers, 25
flip-flops, 39
latches, 37
multiplexers, 24
PALs, 30

PLAs, 29
shift registers, 40
logic gates
fanin, 14
fanout, 14
propagation delay, 14
logical address, 72
logical expressions, 15
derivation, 17
even parity, 16
majority, 16
product-of-sums, 18
simplification, 18–23
Boolean algebra method, 18
Karnaugh map method, 19
sum-of-products, 17
`ls` command, 140, 142, 143

M

machine language, 4
macro directive, 218
macro expansion, 212
macro instructions, 220
macro parameters, 219
macros, 212, 218
instructions, 220
macro directive, 218
parameters, 219
`man` command, 134
masking bit, 343
MASM, 5
memory
Bandwidth, 46
access time, 46
address, 45
address space, 45
address translation, 73
building a block, 50
building larger memories, 52
byte addressable, 45
chip select, 51, 54, 57, 58
cycle time, 46
design with D flip-flops, 51
DRAM, 49, 53
dynamic, 49
effective address, 72
EPROM, 48
larger memory design, 53
linear address, 67
logical address, 72, 73
memory address space, 53
memory chips, 53
memory mapping, 56
full mapping, 56
partial mapping, 57
nonvolatile, 48
offset, 72
physical address, 72, 73
PROM, 48
RAM, 49
read cycle, 47
read-only, 48
read/write, 48
ROM, 48
SDRAM, 53
segmentation models, 71
segmented organization, 72
SRAM, 49
static, 49
volatile, 48
wait cycles, 47
write cycle, 47
memory access time, 46
memory address space, 45, 53
memory architecture
IA-32, 72–75
protected mode, 67
real mode, 72–74
memory bandwidth, 46
memory cycle time, 46
memory mapping, 56
full mapping, 56
partial mapping, 57
memory read cycle, 47
memory write cycle, 47
memory-mapped I/O, 77
merge sort, 483
mixed mode operation, 74
mixed-mode programs, 423
calling assembly code, 424
calling C from assembly, 432
compiling, 425
externals, 427
globals, 427

inline assembly, 434–441
parameter passing, 425
preserving registers, 427
returning values, 427
`mkdir` command, 140
`more` command, 140
mounting file system, 110–112
mouse configuration, 119
multibyte data, 58
multidimensional arrays, 279
multiplexers, 24
multisegment segmentation model, 71
`mv` command, 141

N

NAND gate, 13
NASM, 5, 154–156, 160–166
NOR gate, 13
NOT gate, 13
number representation
floating-point, 469–471
signed integer, 466
1's complement, 467
2's complement, 468
excess-M, 466
signed magnitude, 466
unsigned integer, 466
number systems, 461
base, 461
binary, 461, 463
conversion, 463–465
decimal, 461, 462
floating-point, 469–471
hexadecimal, 461, 463
notation, 462
octal, 461, 463
radix, 461

O

octal numbers, 463
office applications, 129
one's complement, 467
one-dimensional arrays, 278
operand size override prefix, 275
OR gate, 13
overflow flag, 296
overflow interrupt, 410
override prefix, 74
address size, 275
operand size, 275
segment override, 269

P

package management, 107
packed BCD numbers
addition, 385
processing, 385
subtraction, 386
paging, 67
PALs, *see* programmable array logic devices
parameter passing, 232, 242–252, 425
call-by-reference, 232
call-by-value, 232
register method, 242
stack method, 243
variable number of parameters, 268–272
parity conversion, 345
parity flag, 300
parted, 83–85
help, 84
print, 85
resize, 85
partitioning hard disk, 82–92
PartitionMagic, 88–92
`passwd` command, 135, 137
`PATH`, 136
path names, 139
absolute path, 139
relative path, 140
Pentium II processor, 62
Pentium Pro processor, 62
peripheral device, 76
physical address, 72
pipelining
superscalar, 62
pipes, 146
PLAs, *see* programmable logic arrays
`preferences` menu, 117
procedure template, 248
procedures
indirect call, 378
local variables, 256
product-of-sums, 18

program counter, 66
programmable array logic devices, 30
programmable logic arrays, 29
programmer productivity, 7
protected mode architecture, 67
`ps` command, 138
PutInt8, 311
`pwd` command, 140

Q
QTparted, 85–86
quicksort, 396
    algorithm, 397
    Pentium procedure, 397

R
real mode architecture, 72–74
real-time applications, 8
recalling a command, 136
recursion, 391–392
    activation record, 392
    factorial, 391
    Fibonacci number, 401
    versus iteration, 400
    in Pentium
        factorial procedure, 392
        quicksort procedure, 397
    quicksort algorithm, 397
redirection, 145
    input, 145
    output, 145
relative path, 140
right-pusher language, 425
`rm` command, 140, 141
`rmdir` command, 140
root password selection, 102
row-major order, 280

S
screen resolution configuration, 119
screensaver configuration, 121
segment descriptor, 69–70
segment descriptor tables, 70–71
    GDT, 70
    IDT, 70
    LDT, 70
segment override, 269
segment registers, 67–69
    CS register, 67
    DS register, 67
    ES register, 67
    FS register, 67
    GS register, 67
    SS register, 67
segmentation, 67
segmentation models, 71
    flat, 71
    multisegment, 71
segmented memory organization, 72
    segment base, 72
    segment offset, 72
selection sort, 332
`set` command, 146
setting access permissions, 143
setting date and time, 124
setting display, 125
shell, 135
shift operations, 348
shift registers, 40
SHORT directive, 319
sign bit, 466
sign extension, 305, 469
sign flag, 298
signed integer, 466
    1's complement, 467
    2's complement, 468
    excess-M, 466
    signed magnitude representation, 466
signed magnitude representation, 466
single-step interrupt, 409
software interrupts, 404, 410
    exceptions, 404
    system-defined, 404
    user-defined, 404
`sort` command, 146
space-efficiency, 7
stack, 233–234
    activation record, 256
    frame pointer, 245, 256
    IA-32 processor implementation, 234
    operations, 236, 237
    operations on flags, 237

overflow, 235, 239
stack frame, 244, 256
top-of-stack, 233, 234
underflow, 235, 239
use, 238
what is it, 233
stack frame, 244, 256
stack operations, 236, 237
stack overflow, 235, 239
stack underflow, 235, 239
status flags, 292–302
string processing
string compare, 375
string length, 374
string representation, 363
fixed-length, 363
variable-length, 363
`su` command, 138
sum-of-products, 17
superscalar, 62
symbol table, 192, 194
system bus, 11

T
`tail` command, 141
TASM, 5
time zone selection, 102
time-critical applications, 8
time-efficiency, 7
TIMES directive, 192
top-of-stack, 233, 234
towers of Hanoi, 481
trap flag, 409
traps, 408, 409
tristate buffers, 50
truth table, 13
AND, 13
even parity, 15
majority, 15
NAND, 13
NOR, 13
NOT, 13
OR, 13
XOR, 13
two's complement, 468
type specifier, 197
BYTE, 197
DWORD, 197
QWORD, 197
TBYTE, 197
WORD, 197
types of memory, 48–50

U
`uname` command, 137
unsigned integer representation, 466

V
variable number of parameters, 268–272
`vim` editor, 147

W
wait cycles, 47
`wc` command, 145
`whereis` command, 137

X
XOR gate, 13

Z
zero extension, 466
zero flag, 66, 292

The GNU General Public License

Version 2, June 1991
Copyright © 1989, 1991 Free Software Foundation, Inc.

59 Temple Place - Suite 330, Boston, MA 02111-1307, USA

Everyone is permitted to copy and distribute verbatim copies of this license document, but changing it is not allowed.

PREAMBLE

The licenses for most software are designed to take away your freedom to share and change it. By contrast, the GNU General Public License is intended to guarantee your freedom to share and change free software—to make sure the software is free for all its users. This General Public License applies to most of the Free Software Foundation's software and to any other program whose authors commit to using it. (Some other Free Software Foundation software is covered by the GNU Library General Public License instead.) You can apply it to your programs, too.

When we speak of free software, we are referring to freedom, not price. Our General Public Licenses are designed to make sure that you have the freedom to distribute copies of free software (and charge for this service if you wish), that you receive source code or can get it if you want it, that you can change the software or use pieces of it in new free programs; and that you know you can do these things.

To protect your rights, we need to make restrictions that forbid anyone to deny you these rights or to ask you to surrender the rights. These restrictions translate to certain responsibilities for you if you distribute copies of the software, or if you modify it.

For example, if you distribute copies of such a program, whether gratis or for a fee, you must give the recipients all the rights that you have. You must make sure that they, too, receive or can get the source code. And you must show them these terms so they know their rights.

We protect your rights with two steps: (1) copyright the software, and (2) offer you this license which gives you legal permission to copy, distribute and/or modify the software.

Also, for each author's protection and ours, we want to make certain that everyone understands that there is no warranty for this free software. If the software is modified by someone else and passed on, we want its recipients to know that what they have is not the original, so that any problems introduced by others will not reflect on the original authors' reputations.

Finally, any free program is threatened constantly by software patents. We wish to avoid the danger that redistributors of a free program will individually obtain patent licenses, in effect making the program proprietary. To prevent this, we have made it clear that any patent must be licensed for everyone's free use or not licensed at all.

The precise terms and conditions for copying, distribution and modification follow.

Terms and Conditions For Copying, Distribution and Modification

0. This License applies to any program or other work which contains a notice placed by the copyright holder saying it may be distributed under the terms of this General Public License. The "Program", below, refers to any such program or work, and a "work based on the Program" means either the Program or any derivative work under copyright law: that is to say, a work containing the Program or a portion of it, either verbatim or with modifications and/or translated into another language. (Hereinafter, translation is included without limitation in the term "modification".) Each licensee is addressed as "you".

   Activities other than copying, distribution and modification are not covered by this License; they are outside its scope. The act of running the Program is not restricted, and the output from the Program is covered only if its contents constitute a work based on the Program (independent of having been made by running the Program). Whether that is true depends on what the Program does.

1. You may copy and distribute verbatim copies of the Program's source code as you receive it, in any medium, provided that you conspicuously and appropriately publish on each copy an appropriate copyright notice and disclaimer of warranty; keep intact all the notices that refer to this License and to the absence of any warranty; and give any other recipients of the Program a copy of this License along with the Program.

   You may charge a fee for the physical act of transferring a copy, and you may at your option offer warranty protection in exchange for a fee.

2. You may modify your copy or copies of the Program or any portion of it, thus forming a work based on the Program, and copy and distribute such modifications or work under the terms of Section 1 above, provided that you also meet all of these conditions:

   (a) You must cause the modified files to carry prominent notices stating that you changed the files and the date of any change.

   (b) You must cause any work that you distribute or publish, that in whole or in part contains or is derived from the Program or any part thereof, to be licensed as a whole at no charge to all third parties under the terms of this License.

   (c) If the modified program normally reads commands interactively when run, you must cause it, when started running for such interactive use in the most ordinary way, to print or display an announcement including an appropriate copyright notice and a notice that there is no warranty (or else, saying that you provide a warranty) and that users may redistribute the program under these conditions, and telling the user how to view a copy of this License. (Exception: if the Program itself is interactive but does not normally print such an announcement, your work based on the Program is not required to print an announcement.)

   These requirements apply to the modified work as a whole. If identifiable sections of that work are not derived from the Program, and can be reasonably considered independent and separate works in themselves, then this License, and its terms, do not apply to those sections when you distribute them as separate works. But when you distribute the same sections as part of a whole which is a work based on the Program, the distribution of the whole must be on the terms of this License, whose permissions for other licensees extend to the entire whole, and thus to each and every part regardless of who wrote it.

Thus, it is not the intent of this section to claim rights or contest your rights to work written entirely by you; rather, the intent is to exercise the right to control the distribution of derivative or collective works based on the Program.

In addition, mere aggregation of another work not based on the Program with the Program (or with a work based on the Program) on a volume of a storage or distribution medium does not bring the other work under the scope of this License.

3. You may copy and distribute the Program (or a work based on it, under Section 2) in object code or executable form under the terms of Sections 1 and 2 above provided that you also do one of the following:

   (a) Accompany it with the complete corresponding machine-readable source code, which must be distributed under the terms of Sections 1 and 2 above on a medium customarily used for software interchange; or,

   (b) Accompany it with a written offer, valid for at least three years, to give any third party, for a charge no more than your cost of physically performing source distribution, a complete machine-readable copy of the corresponding source code, to be distributed under the terms of Sections 1 and 2 above on a medium customarily used for software interchange; or,

   (c) Accompany it with the information you received as to the offer to distribute corresponding source code. (This alternative is allowed only for noncommercial distribution and only if you received the program in object code or executable form with such an offer, in accord with Subsection b above.)

   The source code for a work means the preferred form of the work for making modifications to it. For an executable work, complete source code means all the source code for all modules it contains, plus any associated interface definition files, plus the scripts used to control compilation and installation of the executable. However, as a special exception, the source code distributed need not include anything that is normally distributed (in either source or binary form) with the major components (compiler, kernel, and so on) of the operating system on which the executable runs, unless that component itself accompanies the executable.

   If distribution of executable or object code is made by offering access to copy from a designated place, then offering equivalent access to copy the source code from the same place counts as distribution of the source code, even though third parties are not compelled to copy the source along with the object code.

4. You may not copy, modify, sublicense, or distribute the Program except as expressly provided under this License. Any attempt otherwise to copy, modify, sublicense or distribute the Program is void, and will automatically terminate your rights under this License. However, parties who have received copies, or rights, from you under this License will not have their licenses terminated so long as such parties remain in full compliance.

5. You are not required to accept this License, since you have not signed it. However, nothing else grants you permission to modify or distribute the Program or its derivative works. These actions are prohibited by law if you do not accept this License. Therefore, by modifying or distributing the Program (or any work based on the Program), you indicate your acceptance of this License to do so, and all its terms and conditions for copying, distributing or modifying the Program or works based on it.

6. Each time you redistribute the Program (or any work based on the Program), the recipient automatically receives a license from the original licensor to copy, distribute or modify the Program subject to these terms and conditions. You may not impose any further restrictions on the recipients' exercise of the rights granted herein. You are not responsible for enforcing compliance by third parties to this License.
7. If, as a consequence of a court judgment or allegation of patent infringement or for any other reason (not limited to patent issues), conditions are imposed on you (whether by court order, agreement or otherwise) that contradict the conditions of this License, they do not excuse you from the conditions of this License. If you cannot distribute so as to satisfy simultaneously your obligations under this License and any other pertinent obligations, then as a consequence you may not distribute the Program at all. For example, if a patent license would not permit royalty-free redistribution of the Program by all those who receive copies directly or indirectly through you, then the only way you could satisfy both it and this License would be to refrain entirely from distribution of the Program.

   If any portion of this section is held invalid or unenforceable under any particular circumstance, the balance of the section is intended to apply and the section as a whole is intended to apply in other circumstances.

   It is not the purpose of this section to induce you to infringe any patents or other property right claims or to contest validity of any such claims; this section has the sole purpose of protecting the integrity of the free software distribution system, which is implemented by public license practices. Many people have made generous contributions to the wide range of software distributed through that system in reliance on consistent application of that system; it is up to the author/donor to decide if he or she is willing to distribute software through any other system and a licensee cannot impose that choice.

   This section is intended to make thoroughly clear what is believed to be a consequence of the rest of this License.
8. If the distribution and/or use of the Program is restricted in certain countries either by patents or by copyrighted interfaces, the original copyright holder who places the Program under this License may add an explicit geographical distribution limitation excluding those countries, so that distribution is permitted only in or among countries not thus excluded. In such case, this License incorporates the limitation as if written in the body of this License.
9. The Free Software Foundation may publish revised and/or new versions of the General Public License from time to time. Such new versions will be similar in spirit to the present version, but may differ in detail to address new problems or concerns.

   Each version is given a distinguishing version number. If the Program specifies a version number of this License which applies to it and "any later version", you have the option of following the terms and conditions either of that version or of any later version published by the Free Software Foundation. If the Program does not specify a version number of this License, you may choose any version ever published by the Free Software Foundation.
10. If you wish to incorporate parts of the Program into other free programs whose distribution conditions are different, write to the author to ask for permission. For software which is copyrighted by the Free Software Foundation, write to the Free Software Foundation; we sometimes make exceptions for this. Our decision will be guided by the two goals of preserving the free status of all derivatives of our free software and of promoting the sharing and reuse of software generally.

No Warranty

11. Because the program is licensed free of charge, there is no warranty for the program, to the extent permitted by applicable law. Except when otherwise stated in writing the copyright holders and/or other parties provide the program "as is" without warranty of any kind, either expressed or implied, including, but not limited to, the implied warranties of merchantability and fitness for a particular purpose. The entire risk as to the quality and performance of the program is with you. Should the program prove defective, you assume the cost of all necessary servicing, repair or correction.
12. In no event unless required by applicable law or agreed to in writing will any copyright holder, or any other party who may modify and/or redistribute the program as permitted above, be liable to you for damages, including any general, special, incidental or consequential damages arising out of the use or inability to use the program (including but not limited to loss of data or data being rendered inaccurate or losses sustained by you or third parties or a failure of the program to operate with any other programs), even if such holder or other party has been advised of the possibility of such damages.

End of Terms and Conditions